CODE	S	A
63.129	57x15	180

CODE	
63.012	Z
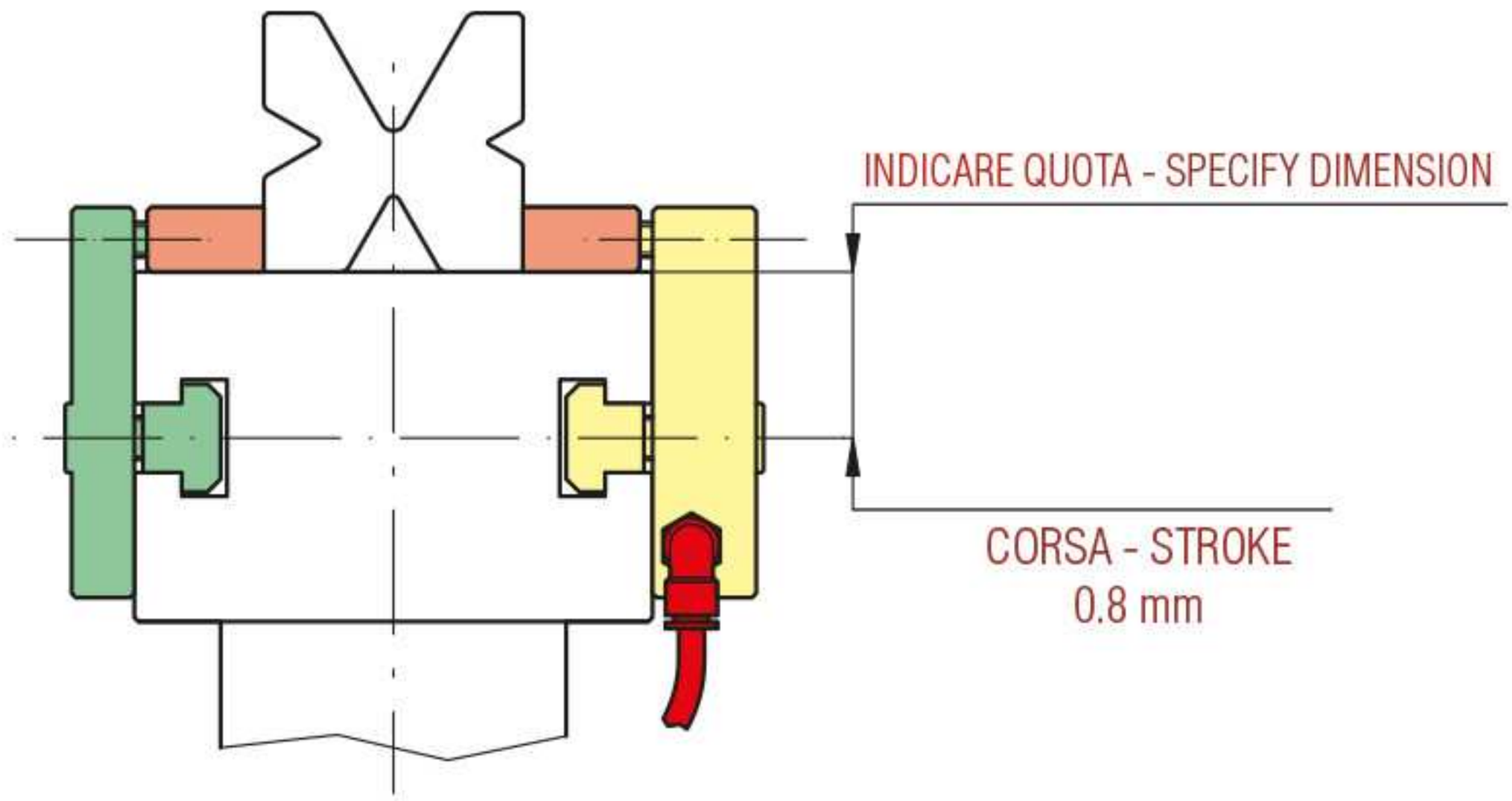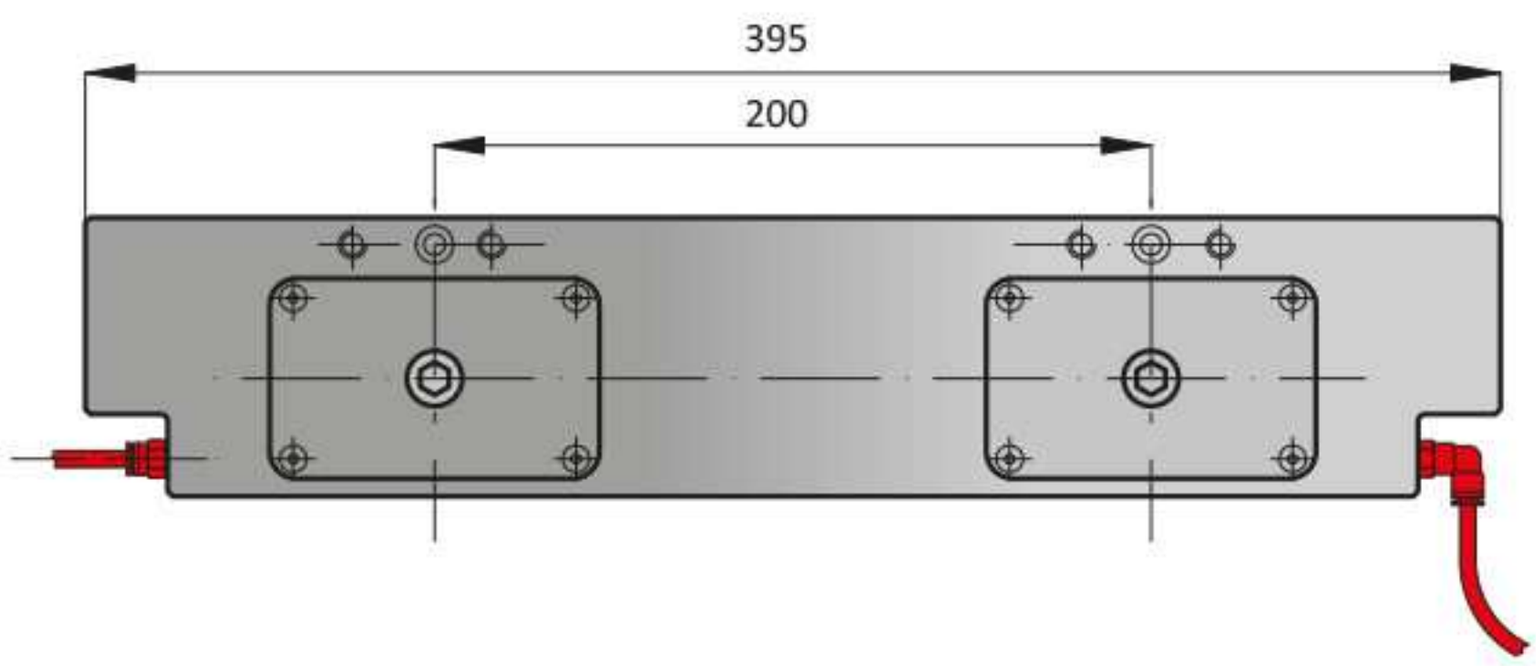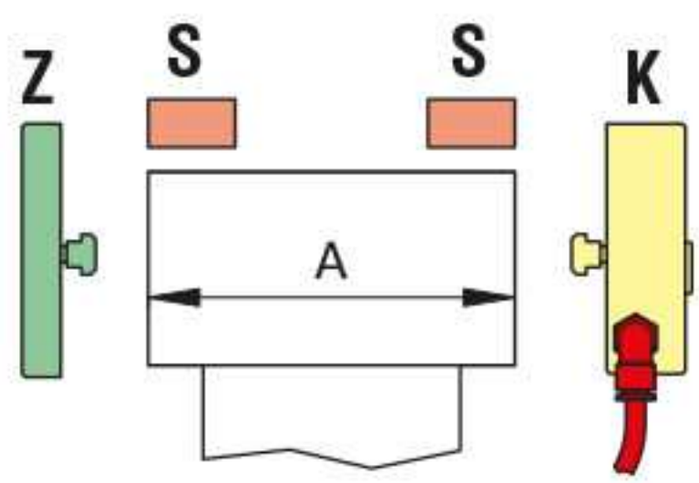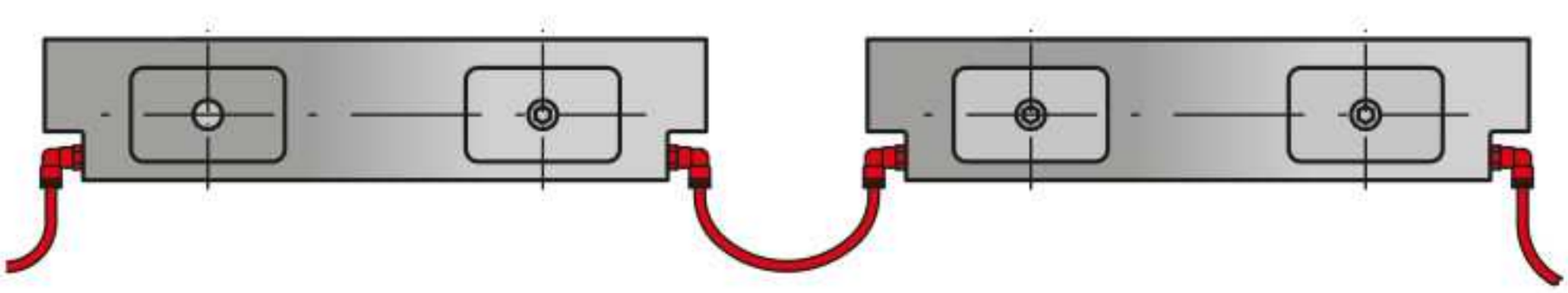
CODE	
63.001	K