CODE	L	H	T/Mt	Mt
50.983	150	100.00	100	

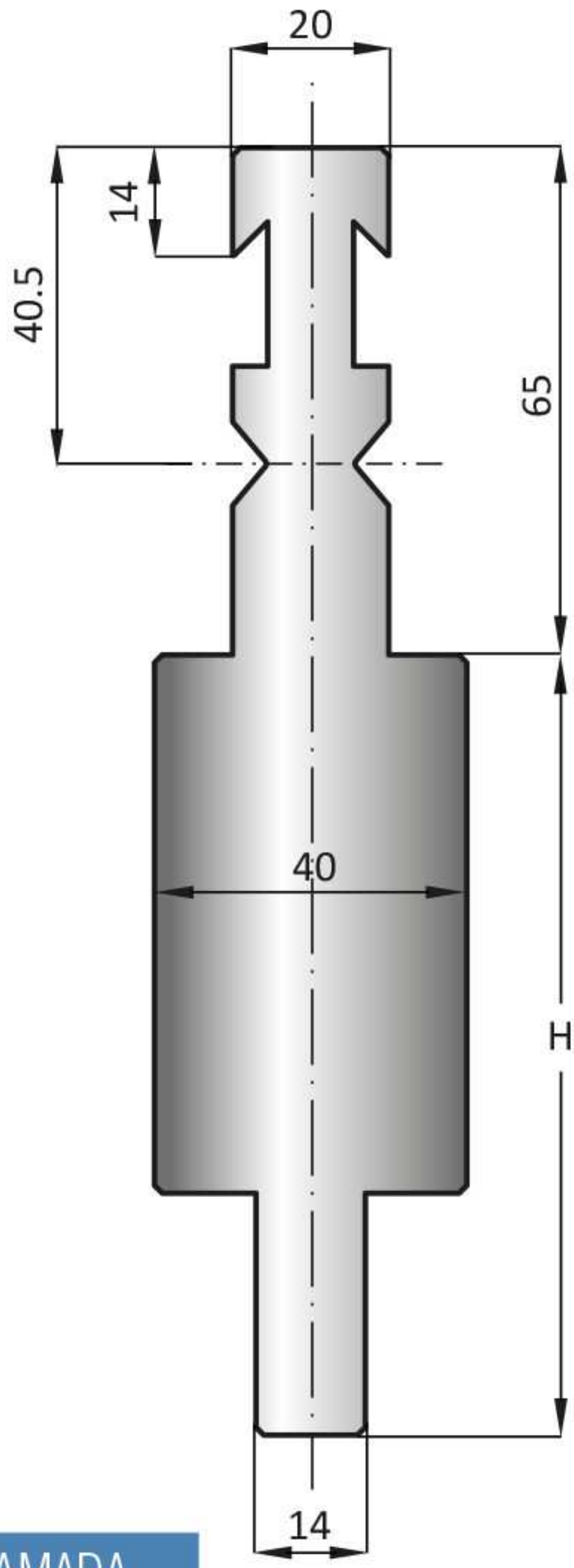

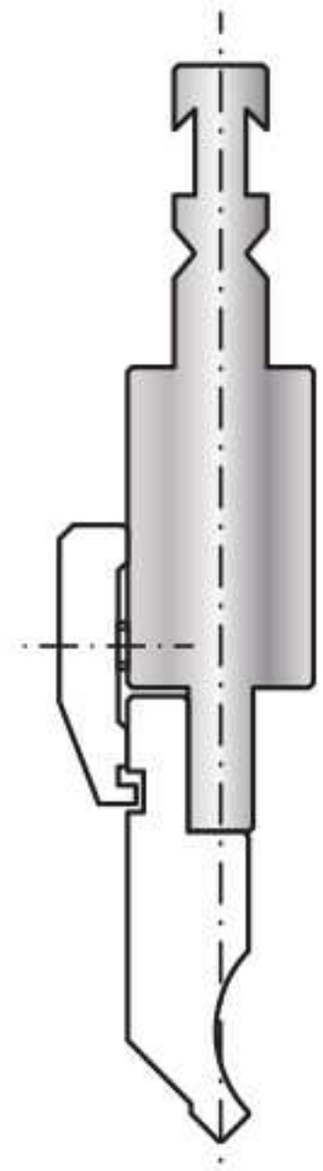

BEYELER RF-A / AMADA

LENGTH 150