CODE	L	H	T/Mt	Mt
50.400	150	100.00	100	

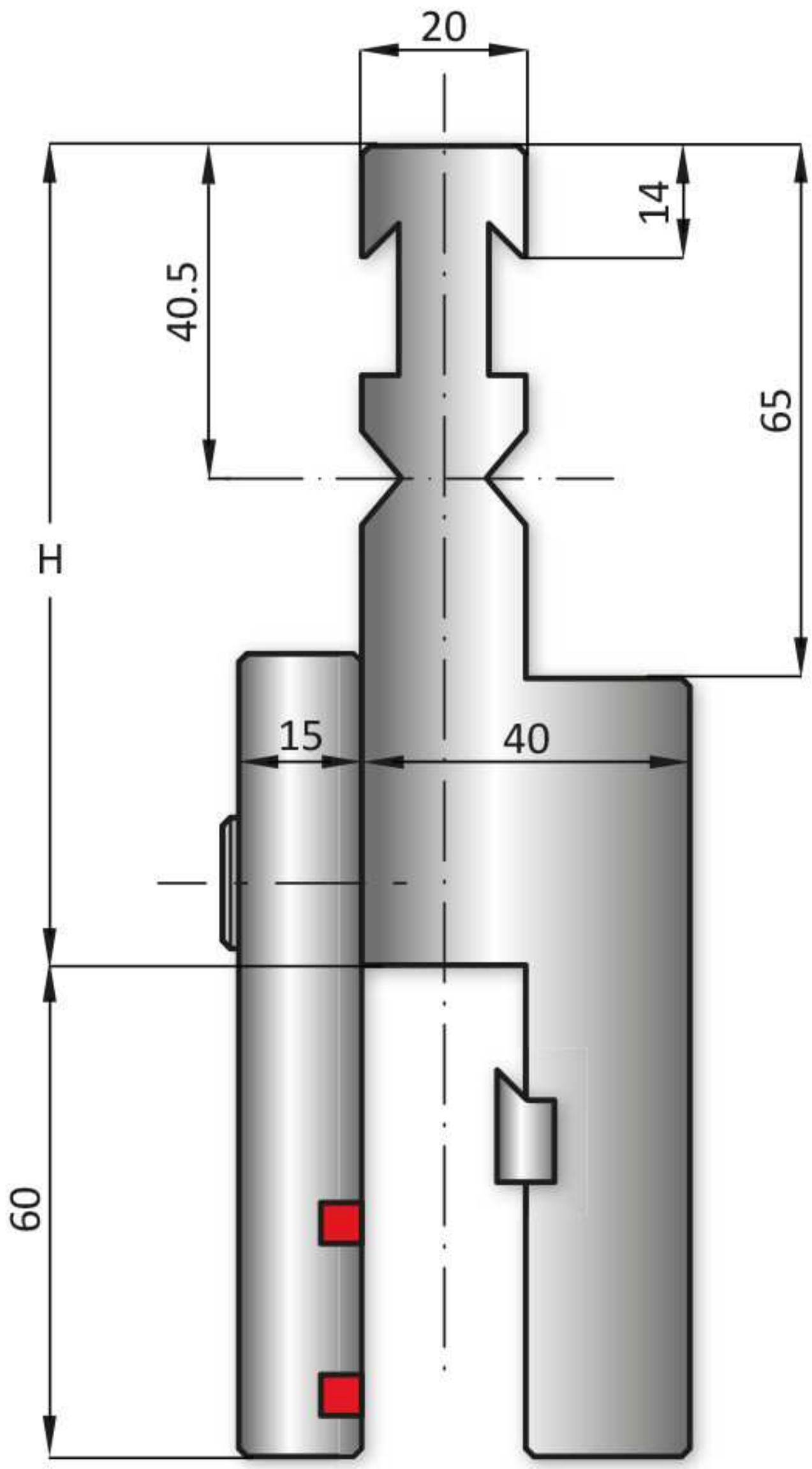

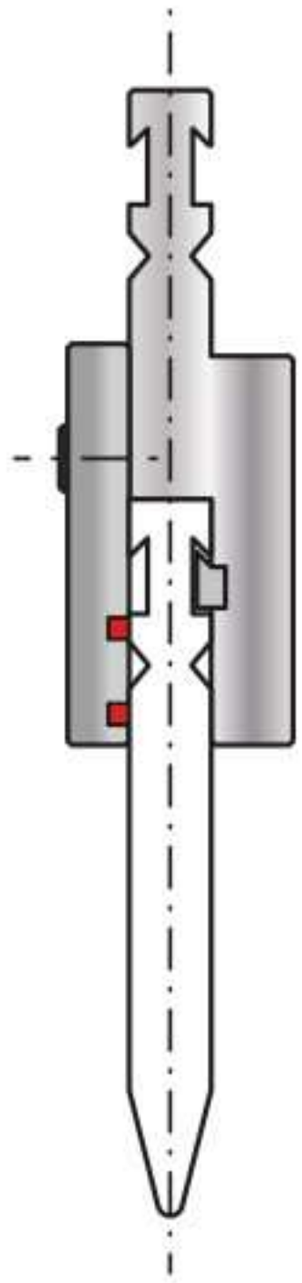

BEYELER RF-A

LENGTH 150