85°
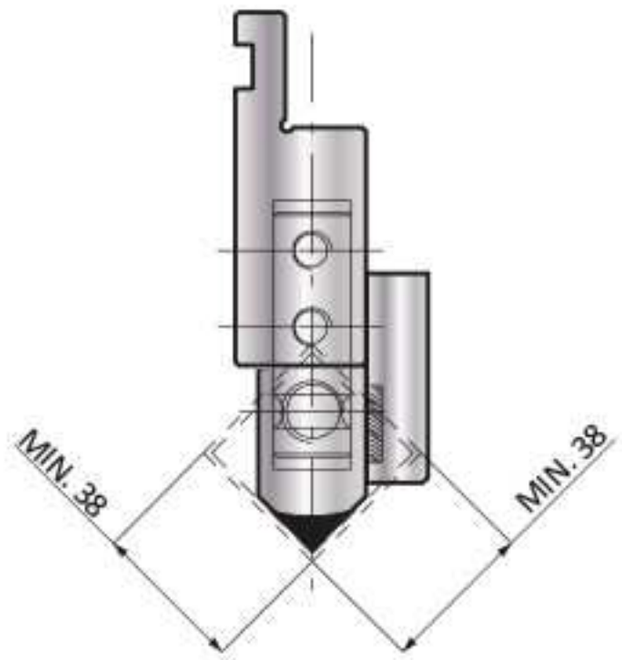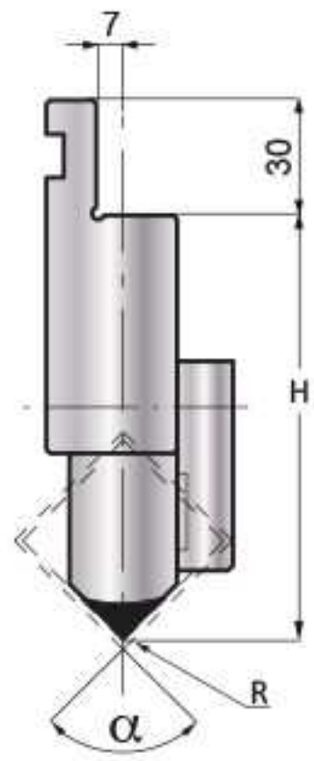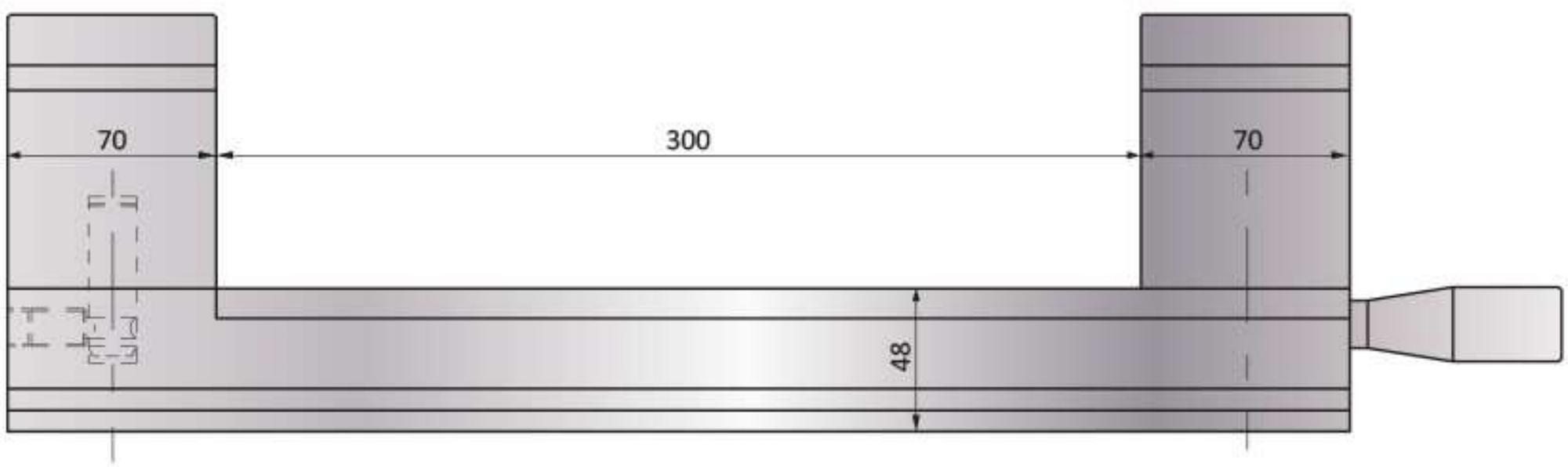
CODE	α	R	H	T/Mt	Mt
40.680	85°	0.80	110.00	15