CODE	α	R	H	T/Mt	Mt
40.116	85°	3.00	65.45	100	

85°

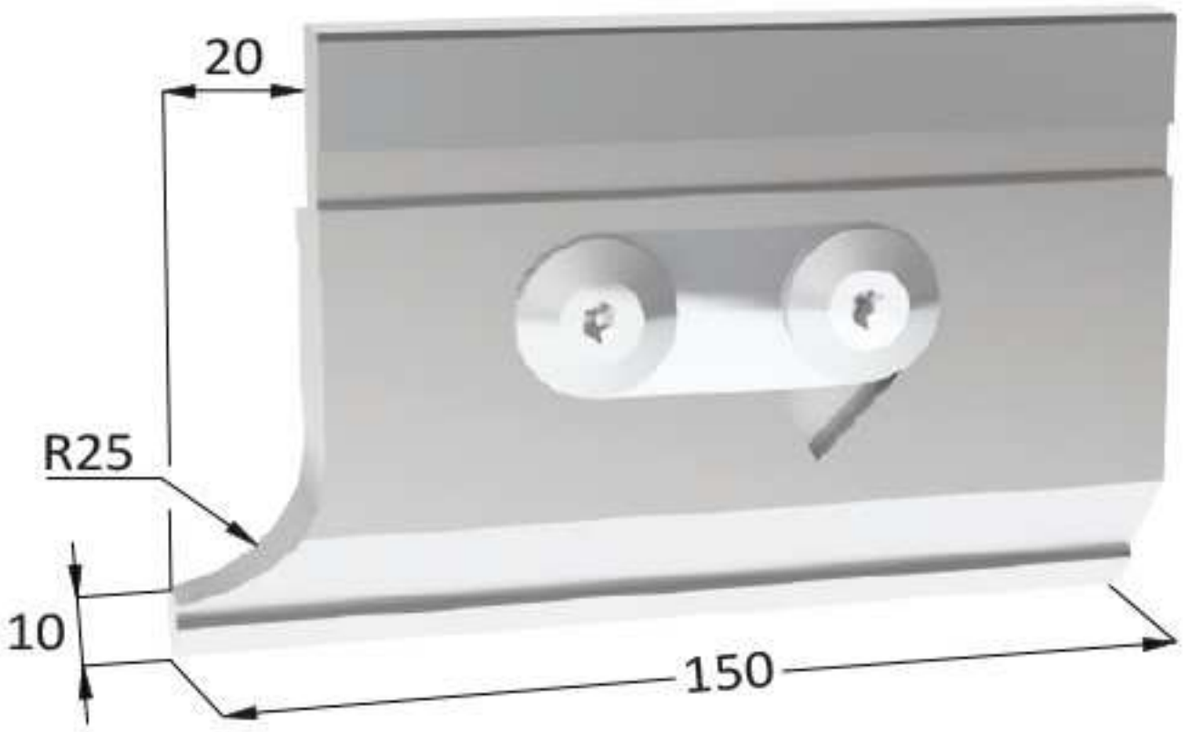

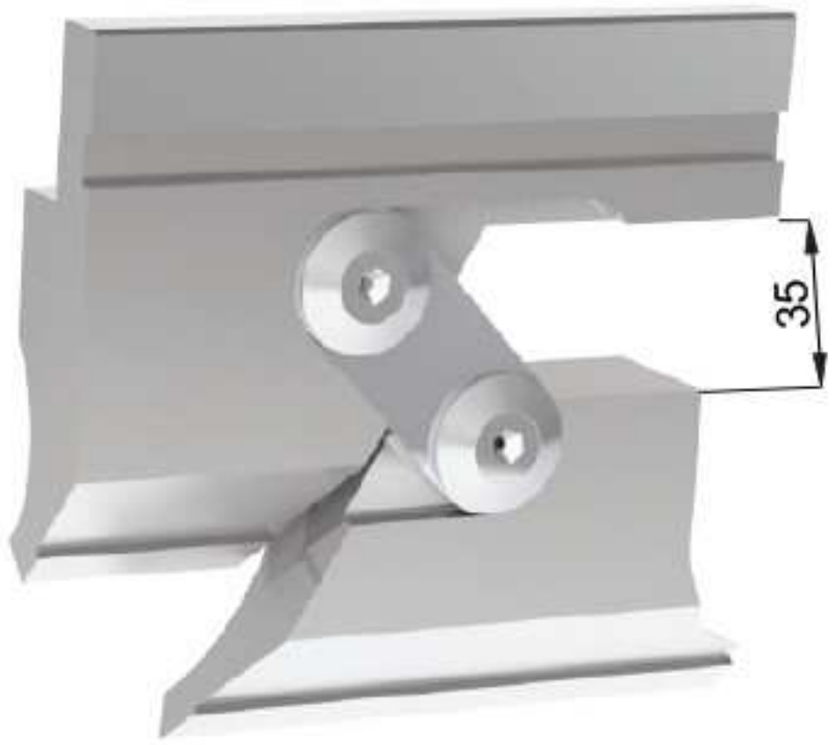

PUNZONE - PUNCHES
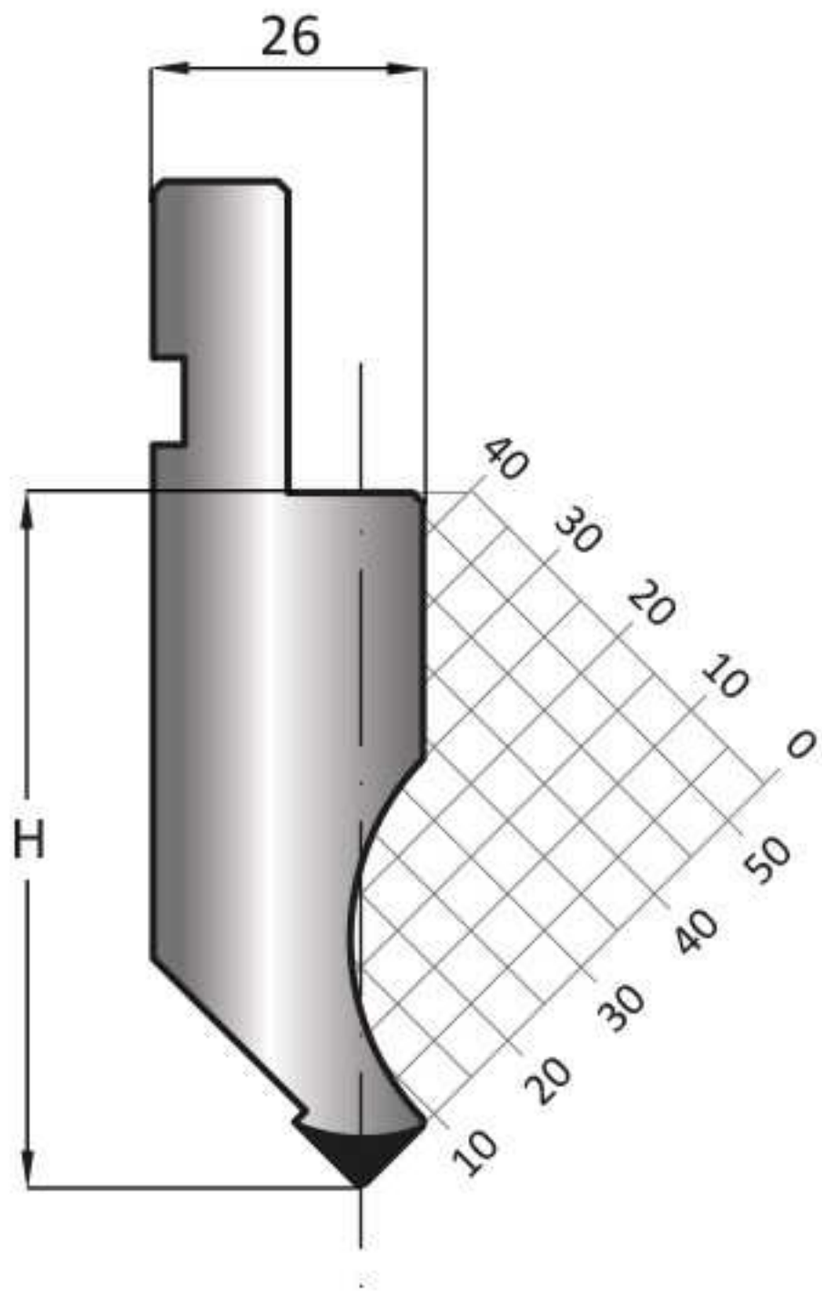
11.201