CODE	α	R	H	T/Mt	Mt
40.114	85°	0.80	66.50	100	

85°

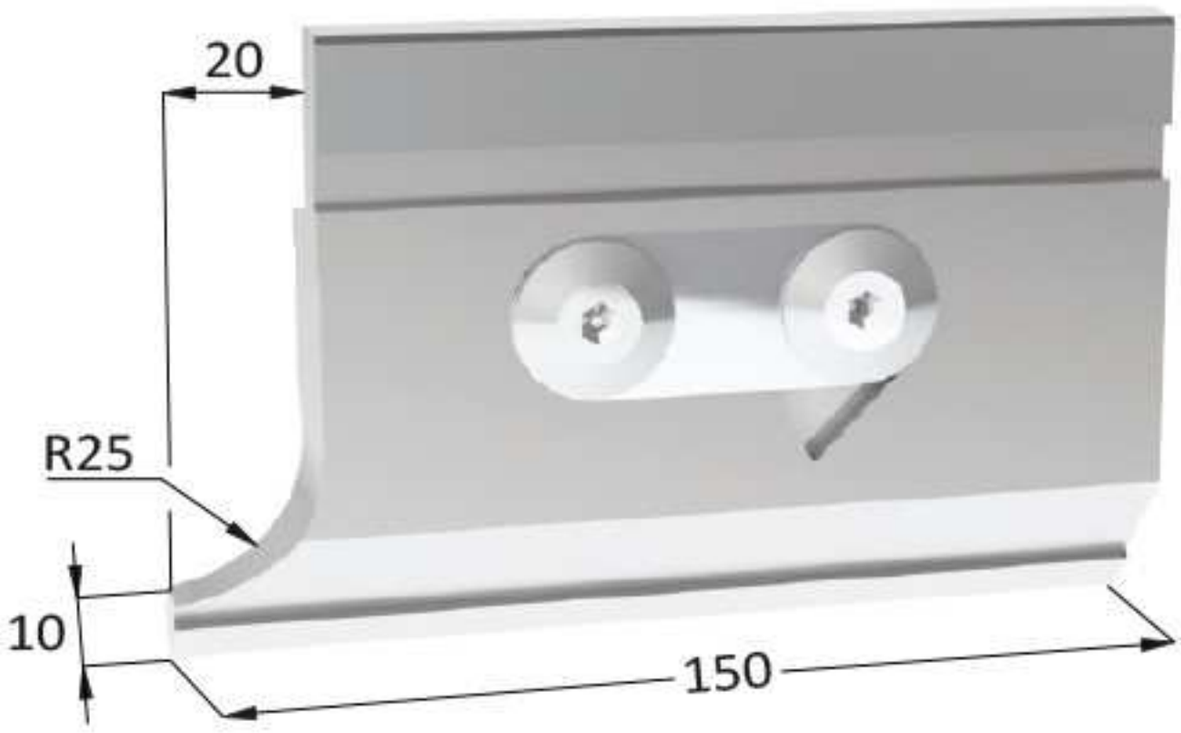

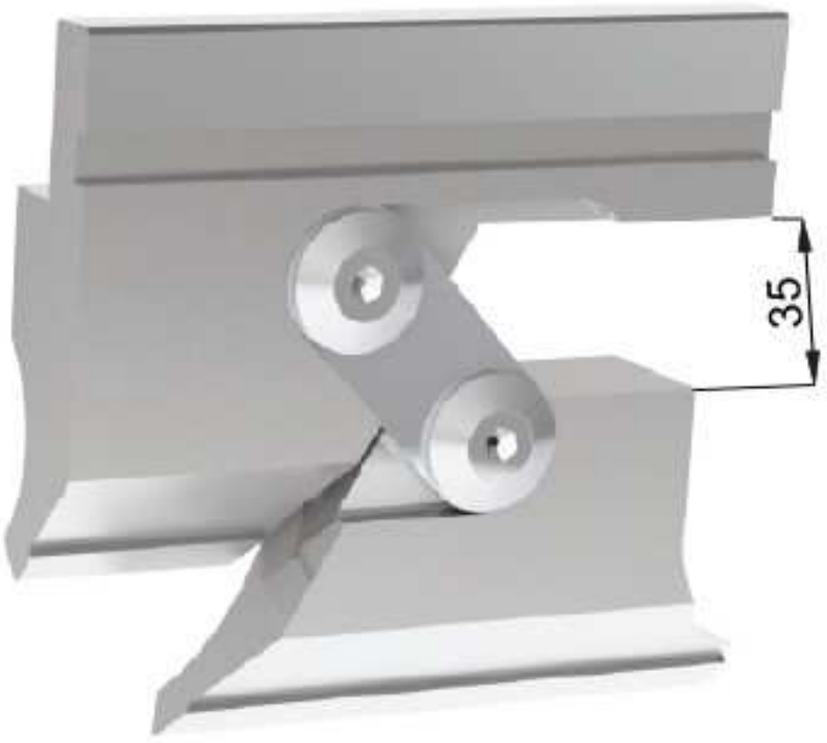

PUNZONE - PUNCHES
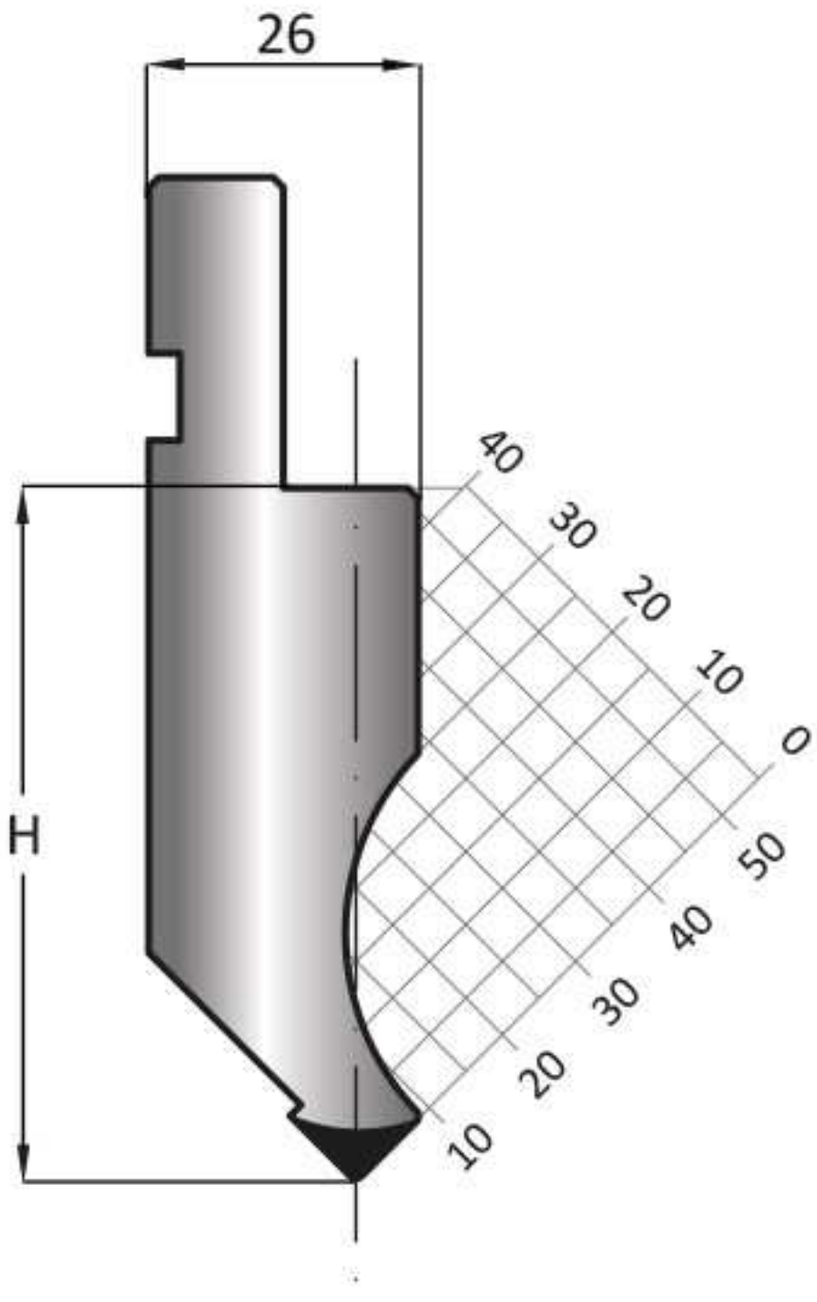
11.200