CODE	α	R	H	T/Mt	Mt
40.113	88°	0.80	66.50	100	

88°

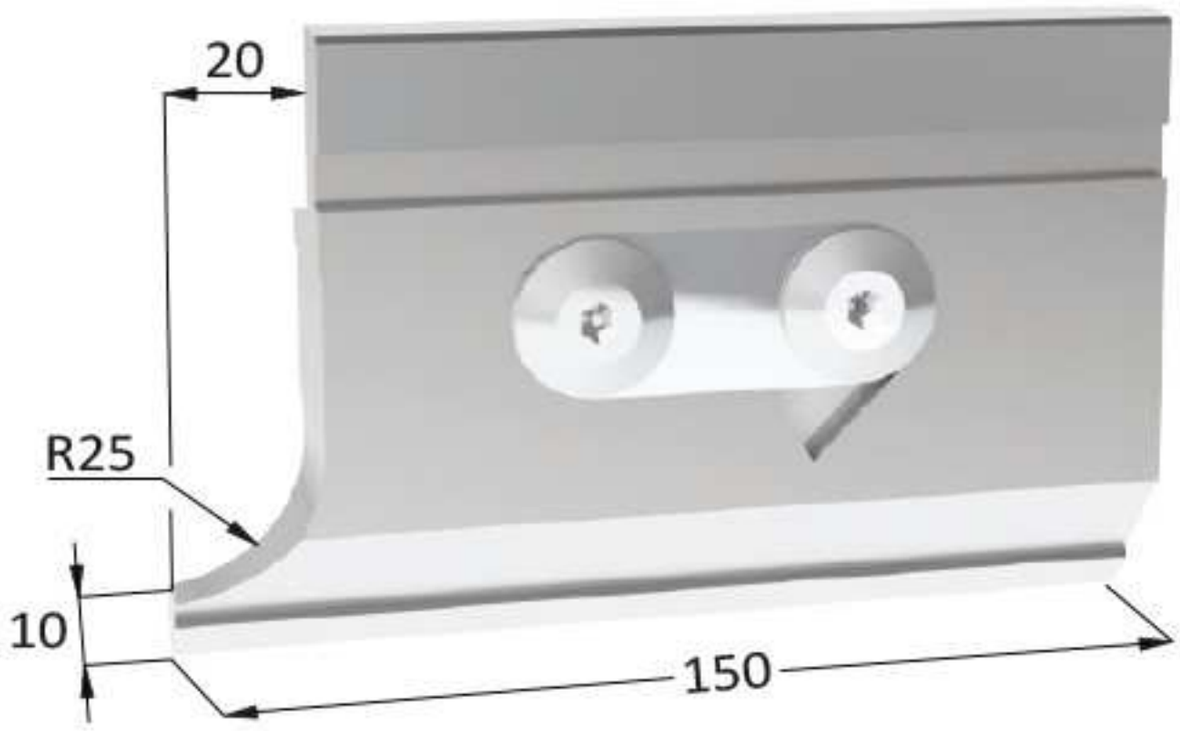

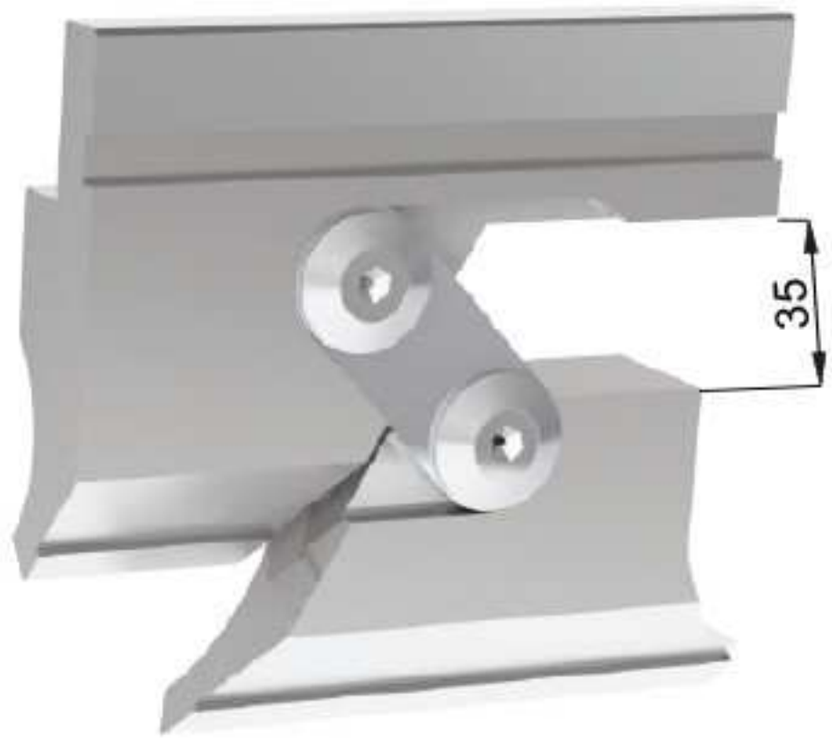

PUNZONE - PUNCHES
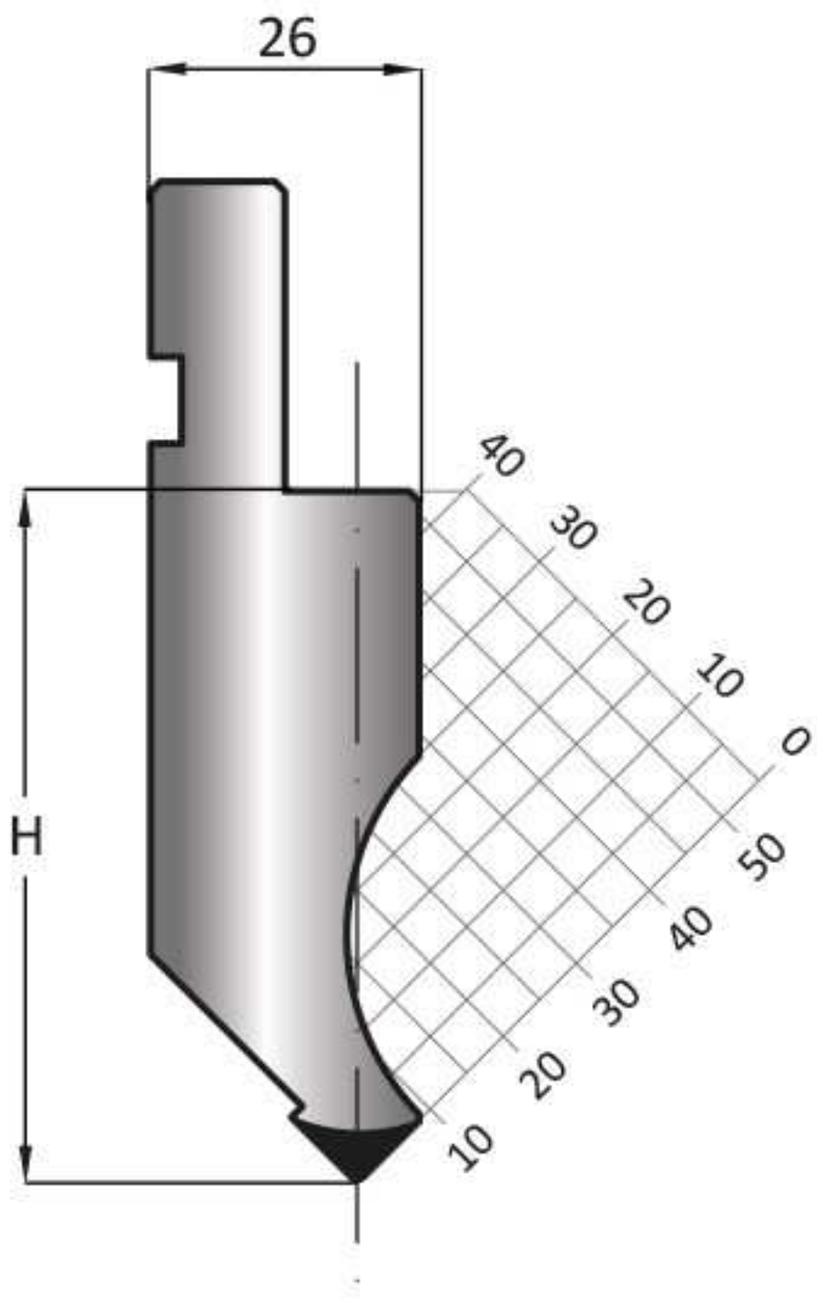
11.145