CODE	α	V	R	H	T/Mt	Mt
24.110	85°	24	3.00	55	100	

85°

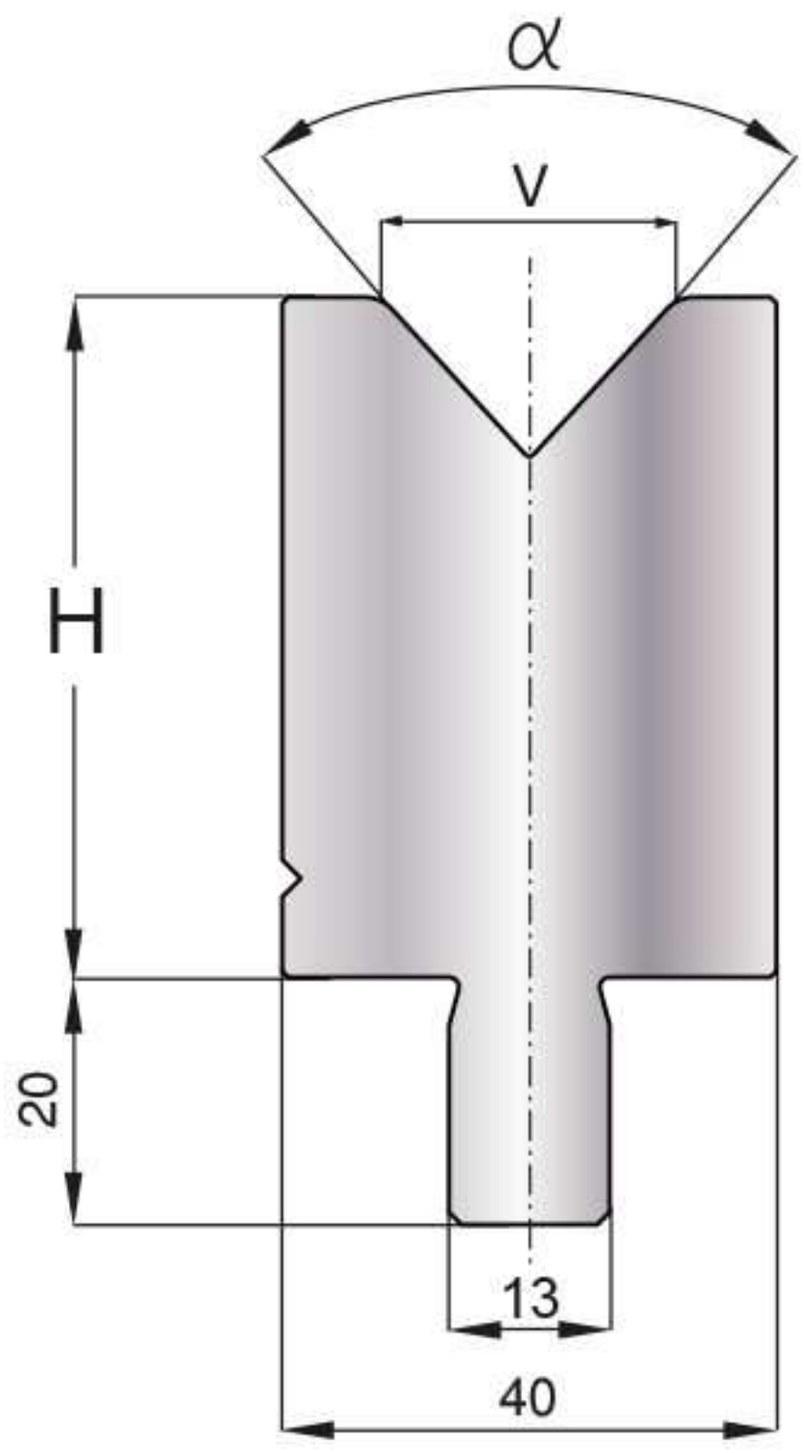

LENGTH	100	200	300	500
SECTION	550			