CODE	H	Mt
22.005	95.00	

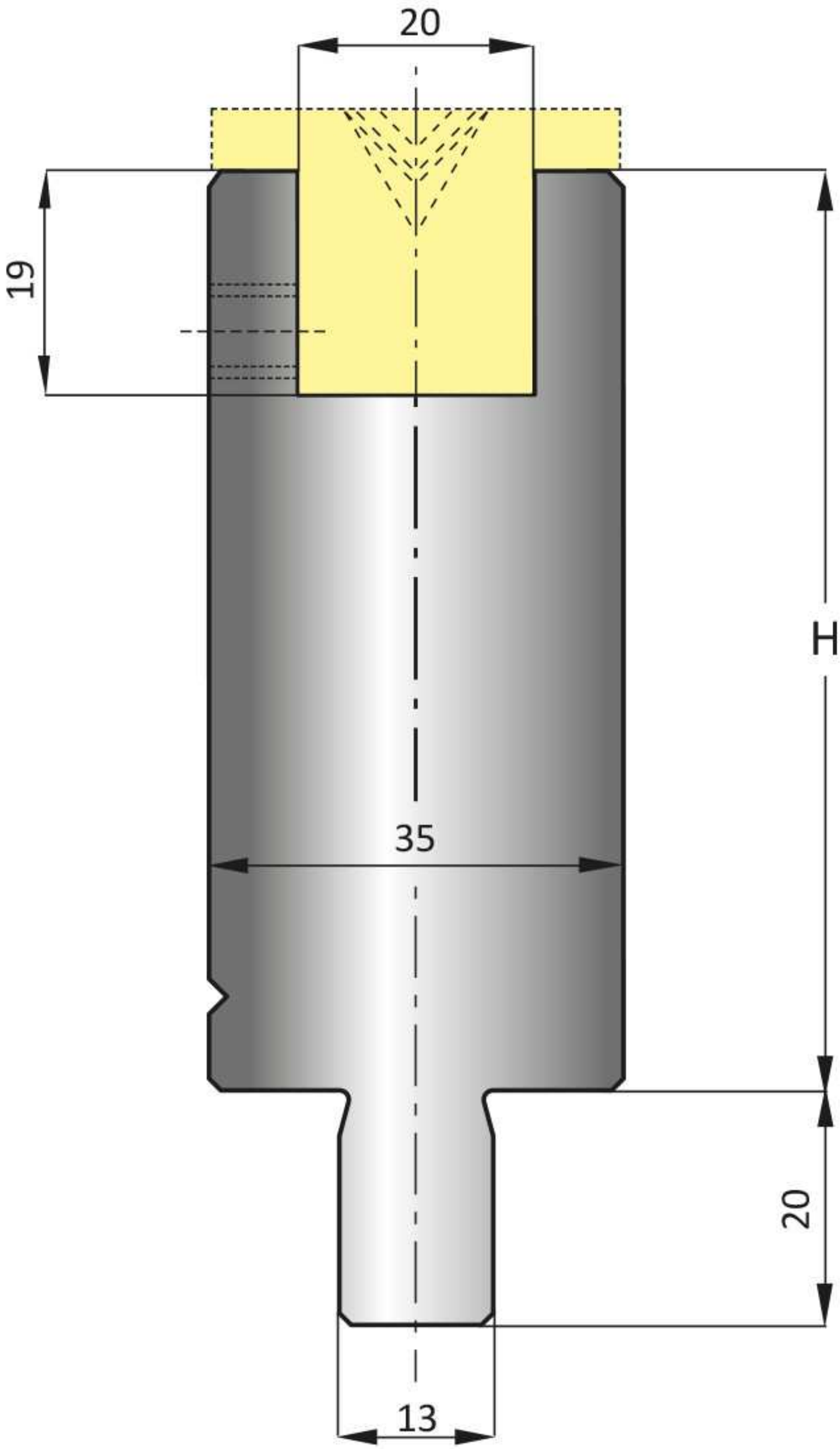

LENGTH 415 835