CODE	α	H	T/Mt	Mt
20.725	80°	200.00	200	

80°

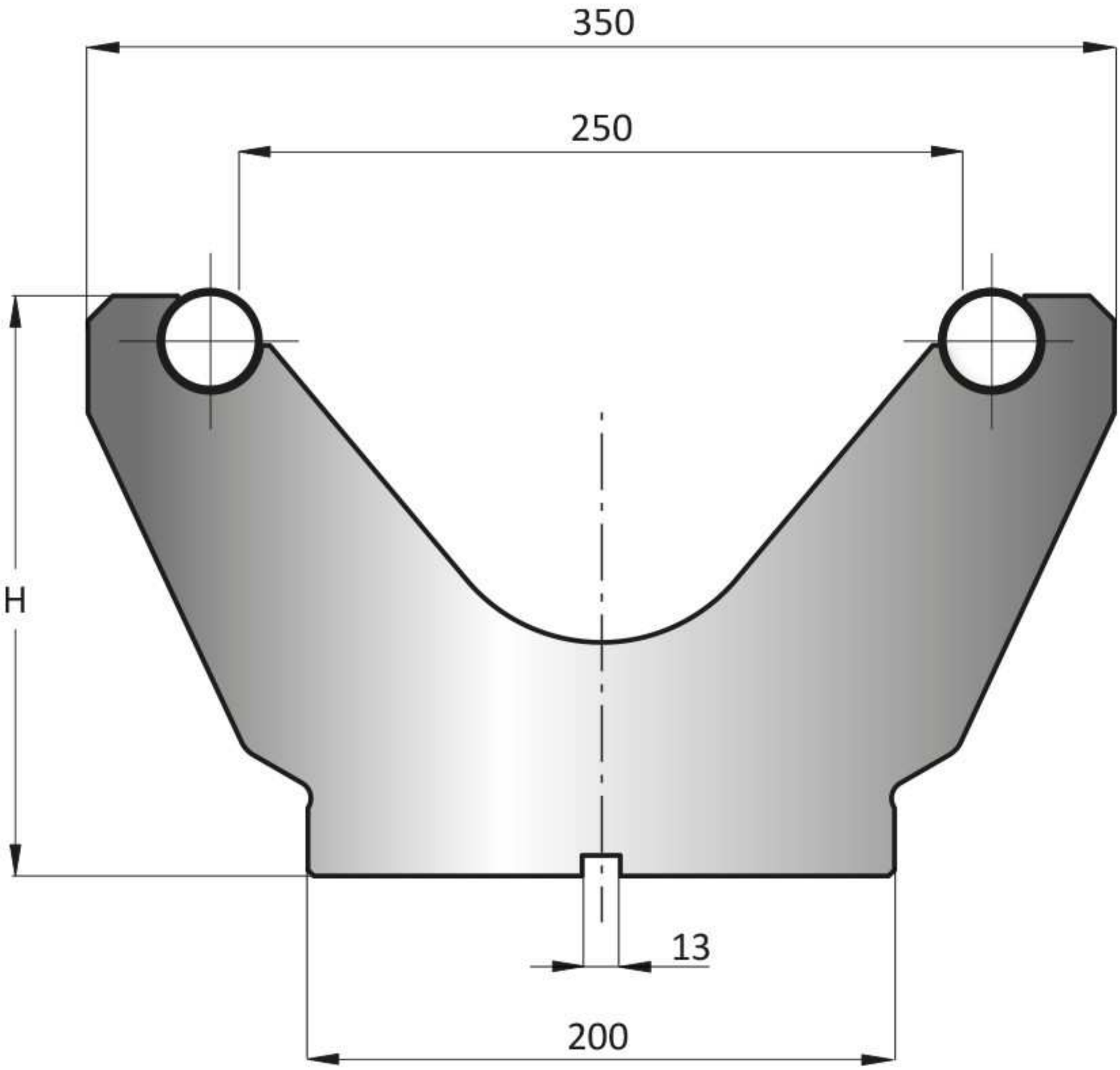

LENGTH 100