CODE	α	V	R	H	T/mt	Mt
20.512	85°	12	3.00	80	100	

85°

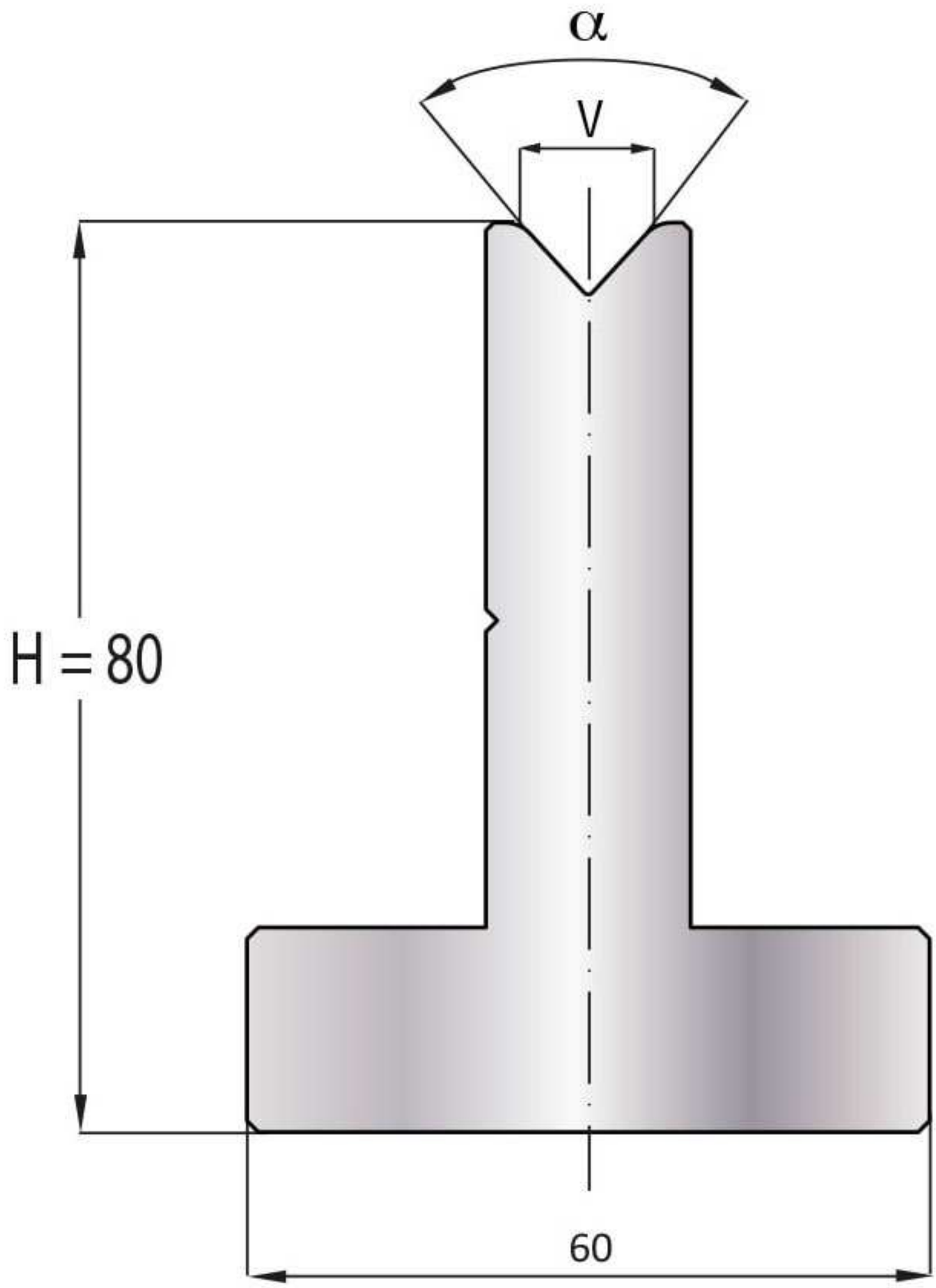

LENGTH	415	835
SECTION	805	