CODE	α	V	R	H	T/Mt	Mt
20.440	45°	40	4.00	75.00	100	

45°

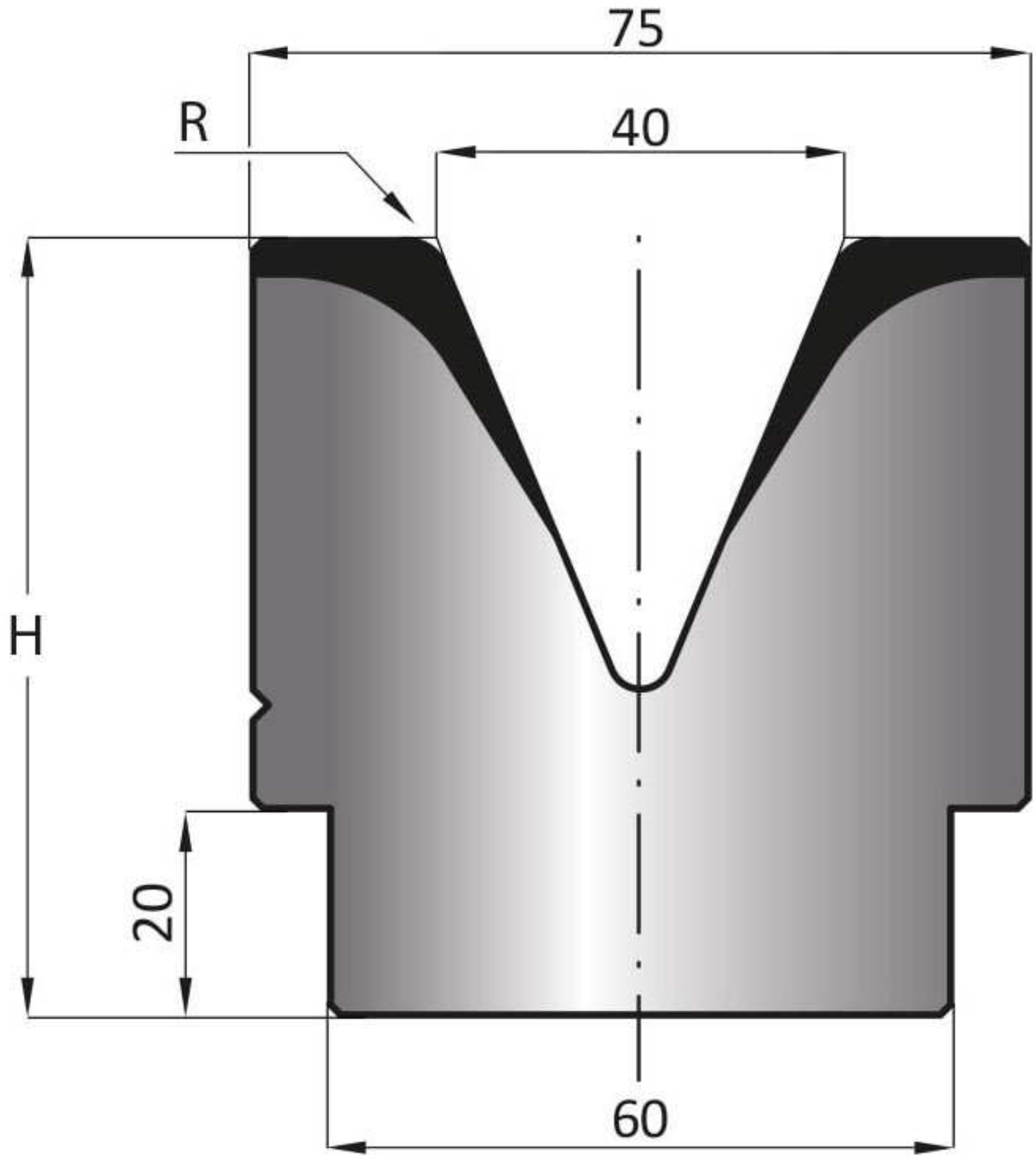

LENGTH	415	835
SECTION	805	