CODE	α	V	R	H	T/mt	Mt
20.408	35°	8	2.00	80	40	

35°

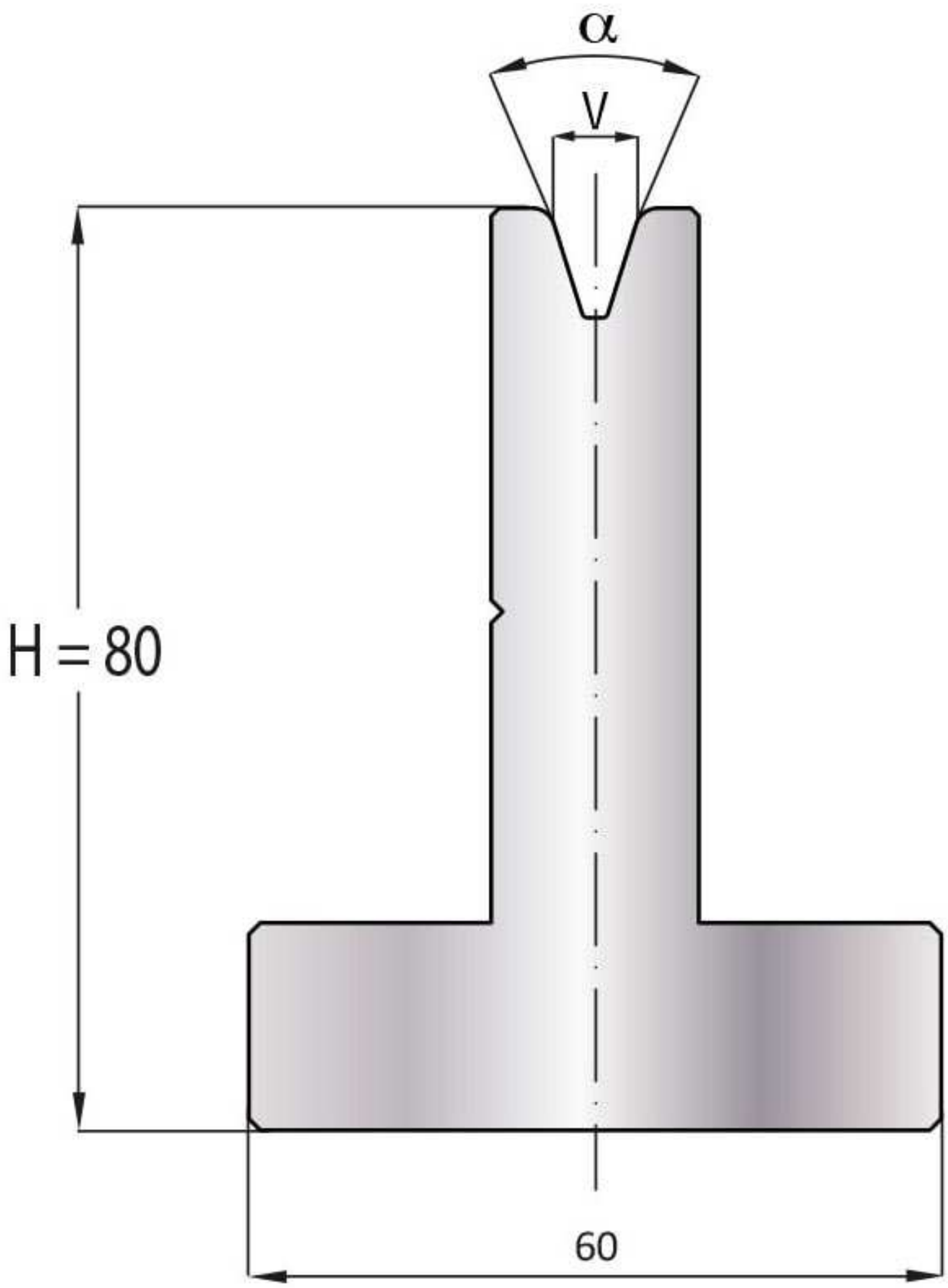

LENGTH	415	835
SECTION	805	