CODE	α	V	R	H	T/mt	Mt
20.309	88°	25	3.00	80	100	

88°

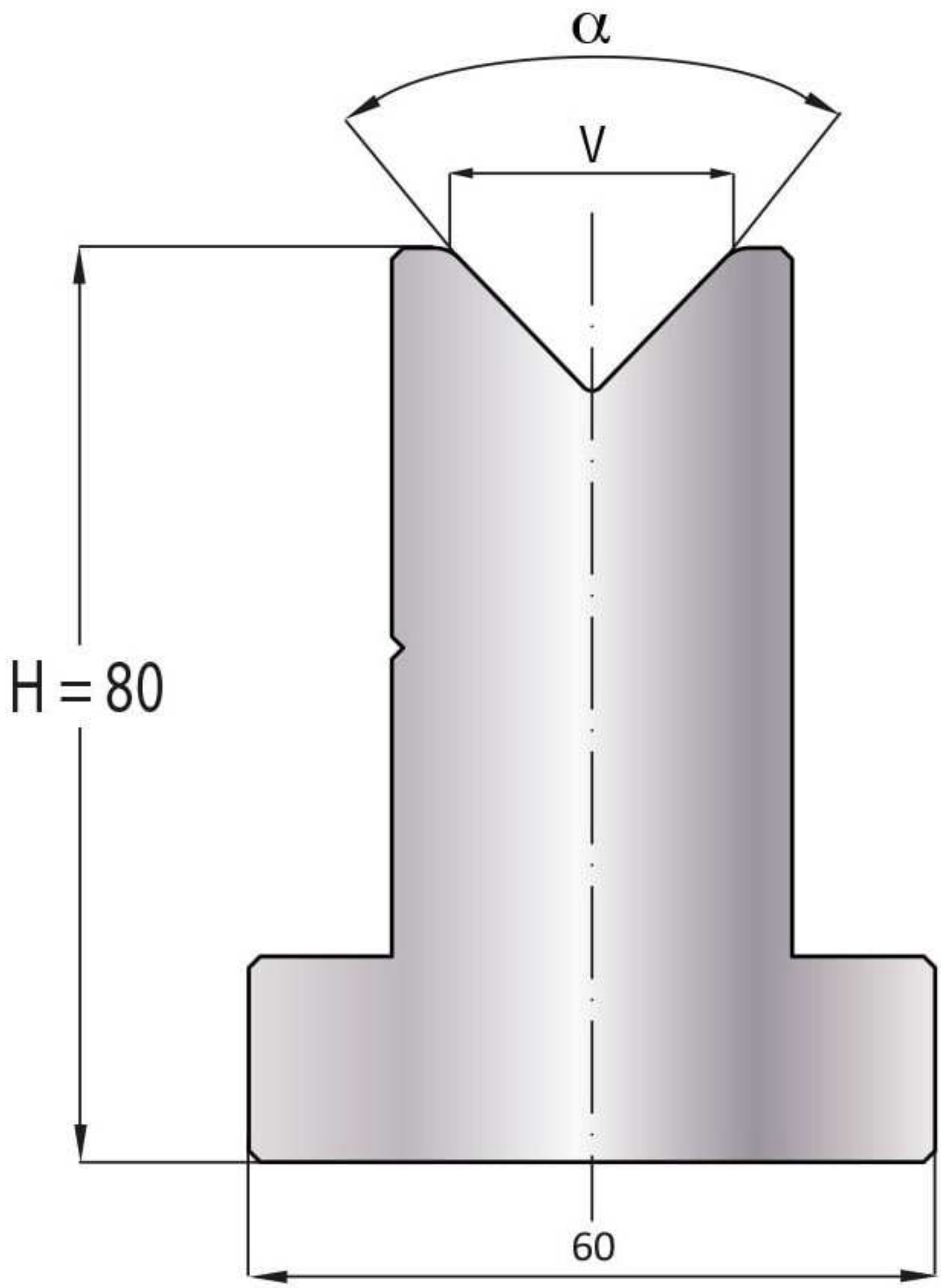

LENGTH	415	835
SECTION	805	