CODE	H
20.274	100.00

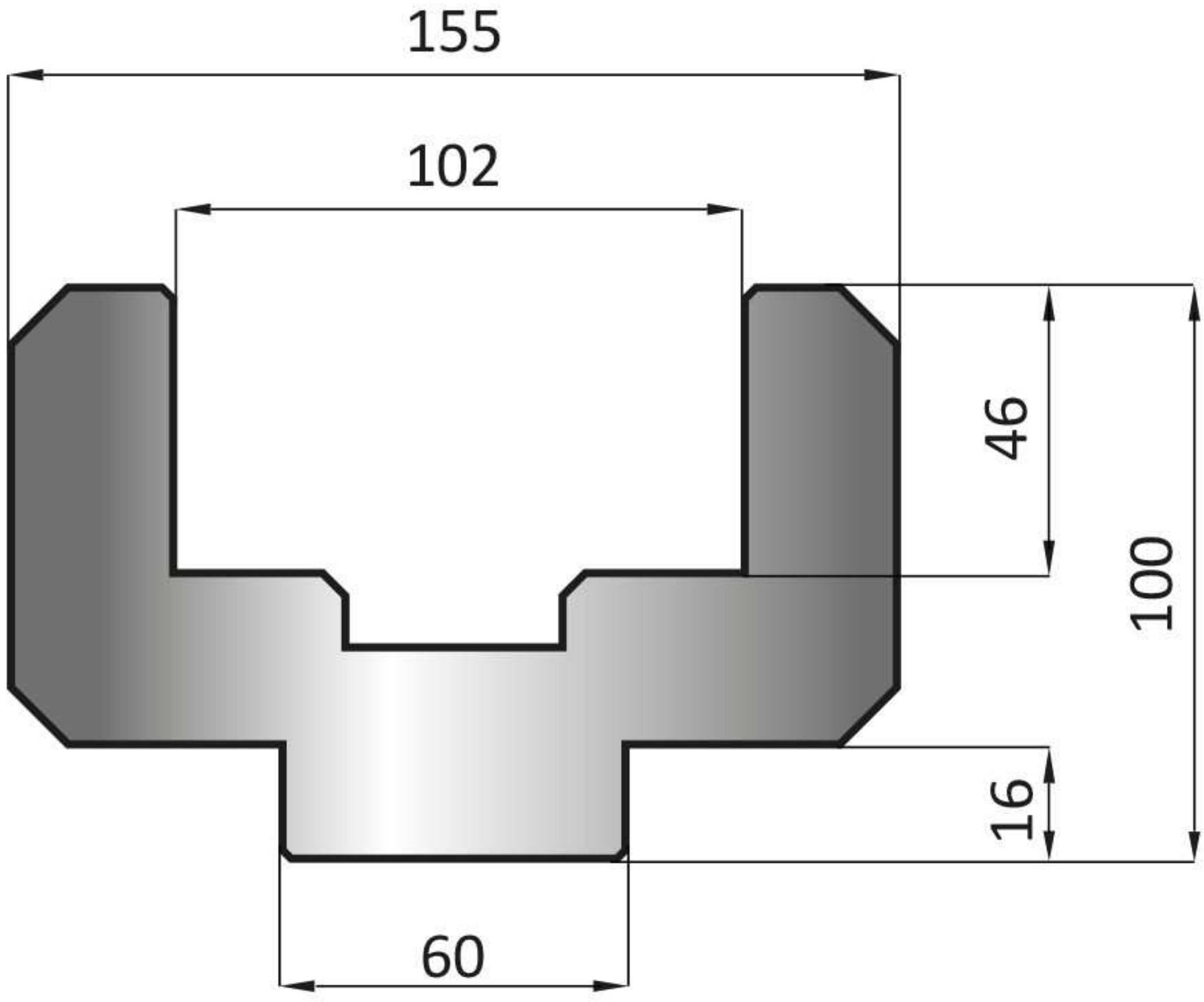

LENGTH 415 835