CODE	α	V	R	H	T/Mt	Mt
20.216	80°	125	9.00	103.00	150	

80°

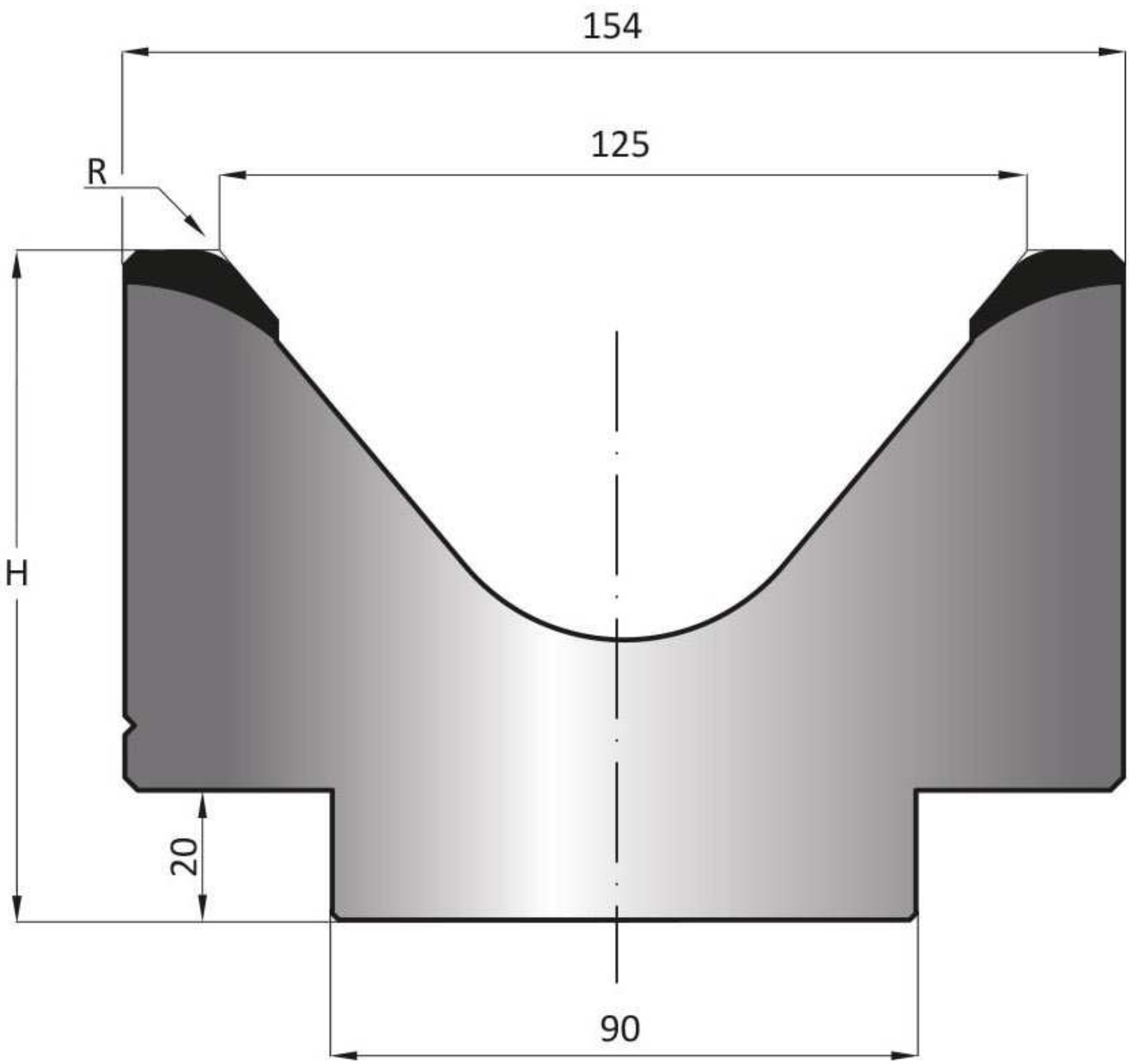

LENGTH	200	415
SECTION	805	