CODE	α	R	H	T/Mt	Mt
14.460	85°	1.50	250.00	50	

85°

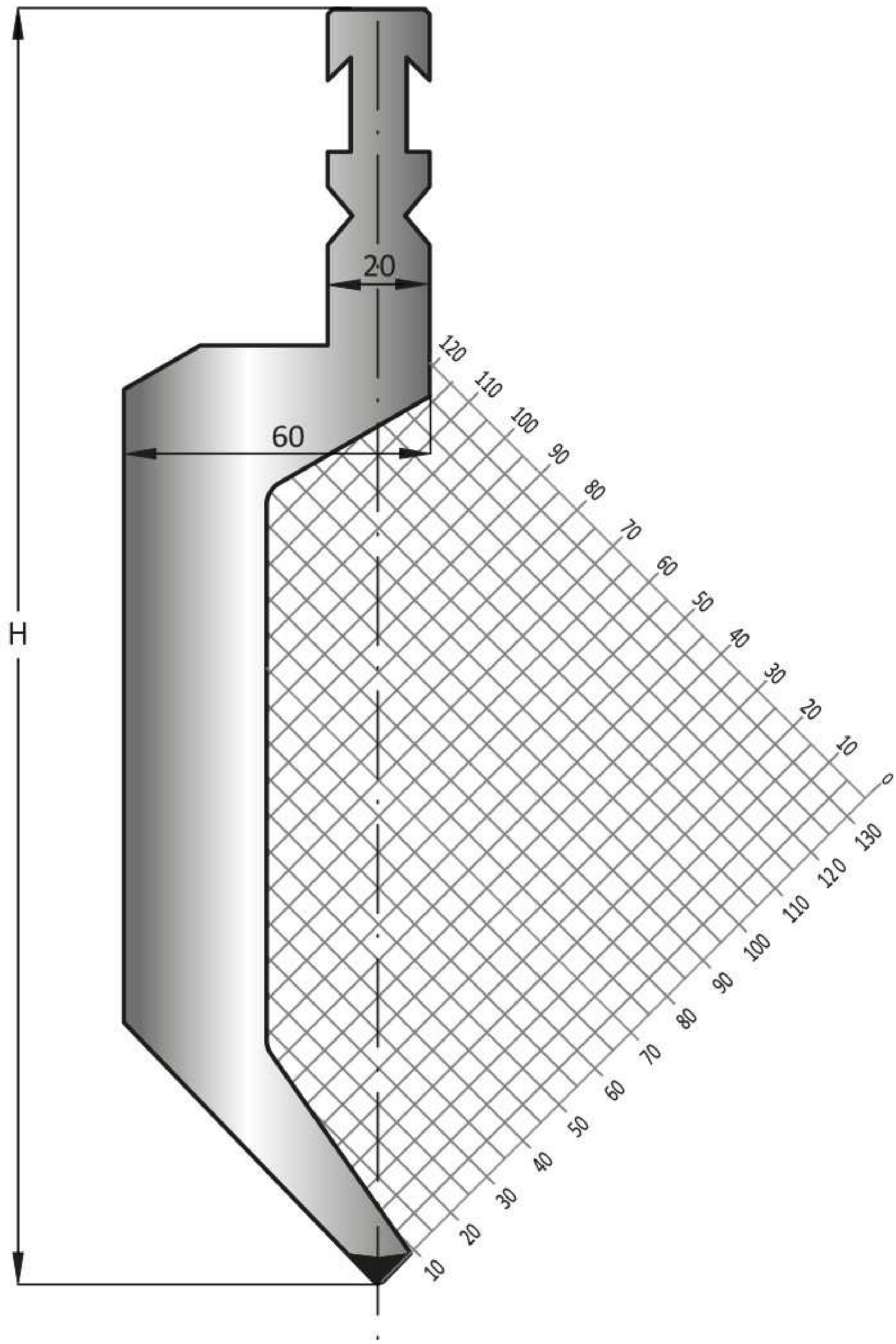

LENGTH	100	200	300	500
SECTION	550			