CODE	α	R	H	T/Mt	Mt
11.810	30°	1.00	200.00	50	

30°

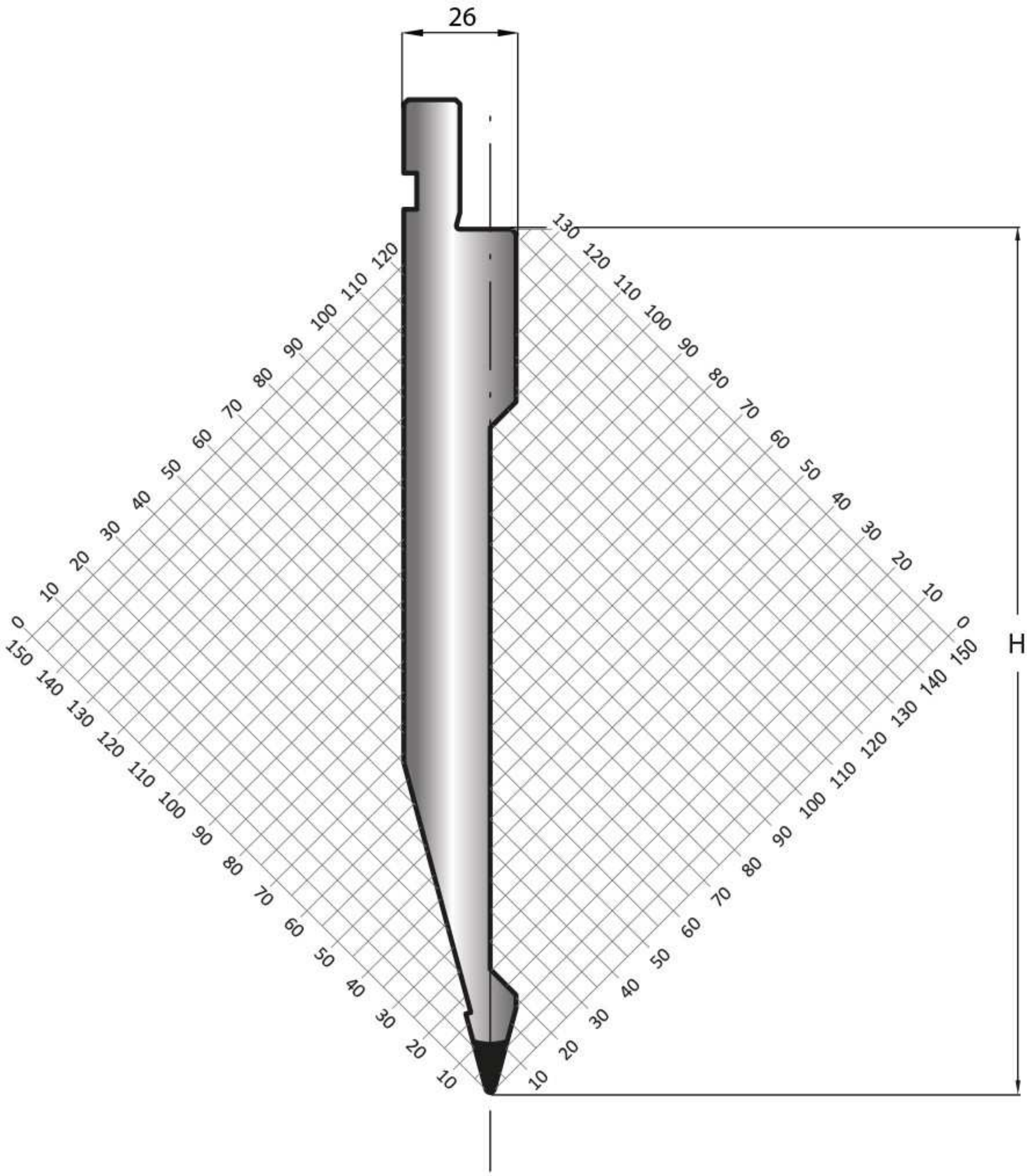

LENGTH	415	835
SECTION	805	