CODE	α	R	H	T/Mt	Mt
11.680	85°	0.80	145.00	25	

85°

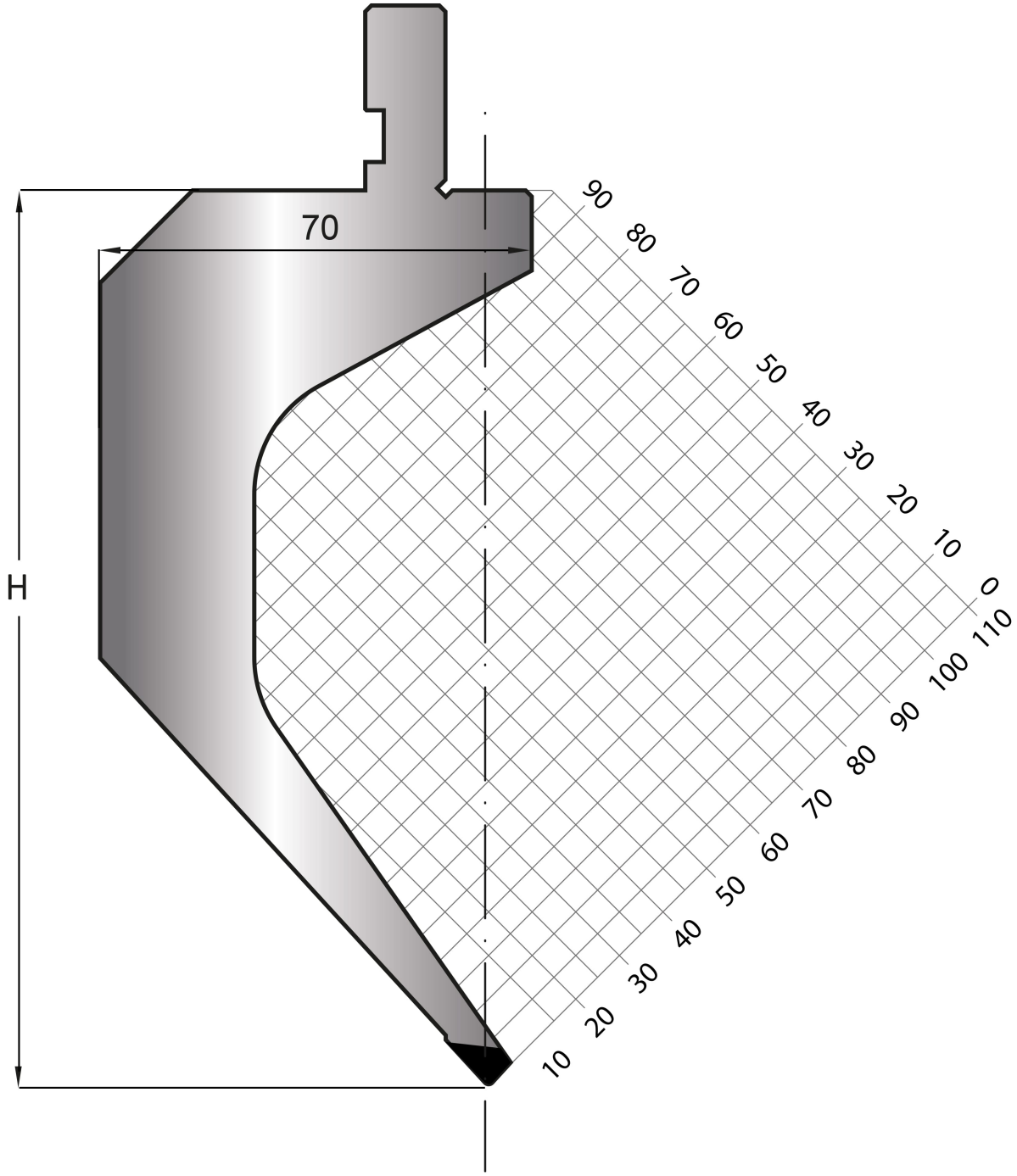

LENGTH	415	835
SECTION	805	