CODE	α	R	H	T/Mt	Mt
11.201	85°	3.00	65.45	100	

85°

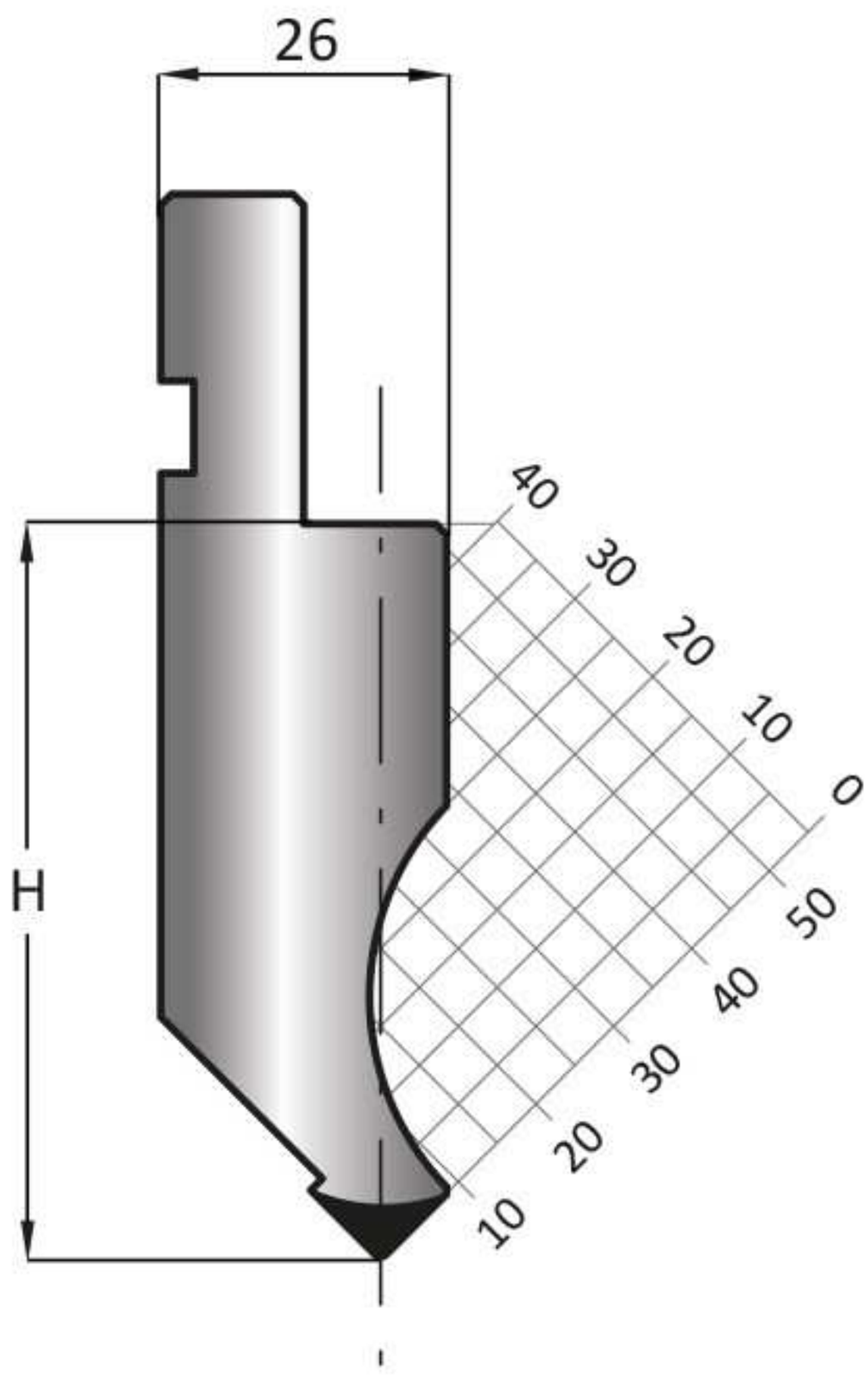

LENGTH	415	835
SECTION	805	