CODE	α	R	H	T/Mt	Mt
11.134	45°	0.60	66.30	80	

45°

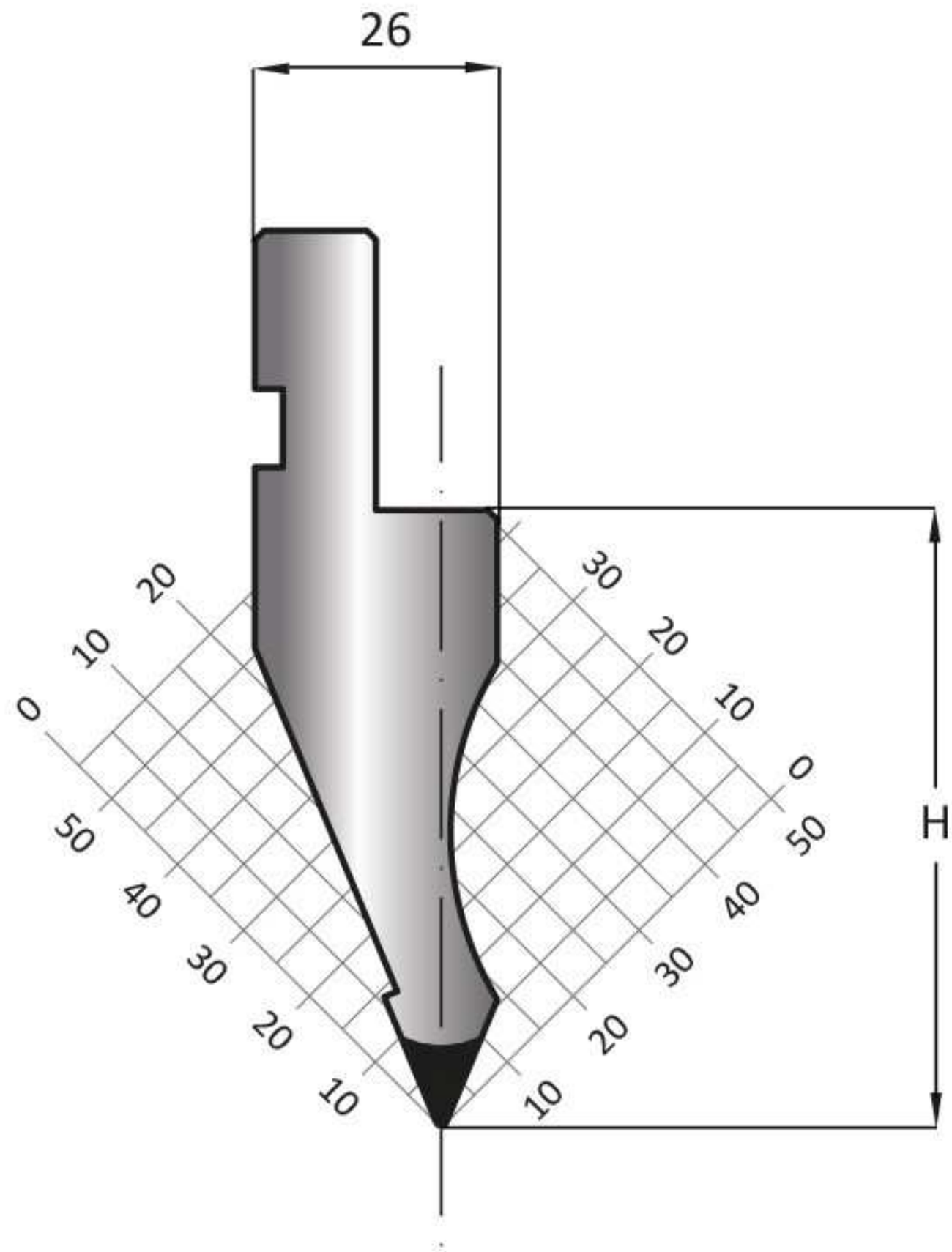

LENGTH	415	835
SECTION	805	