CODE	α	R	H	T/Mt	Mt
11.101	88°	3.00	65.45	100	

88°

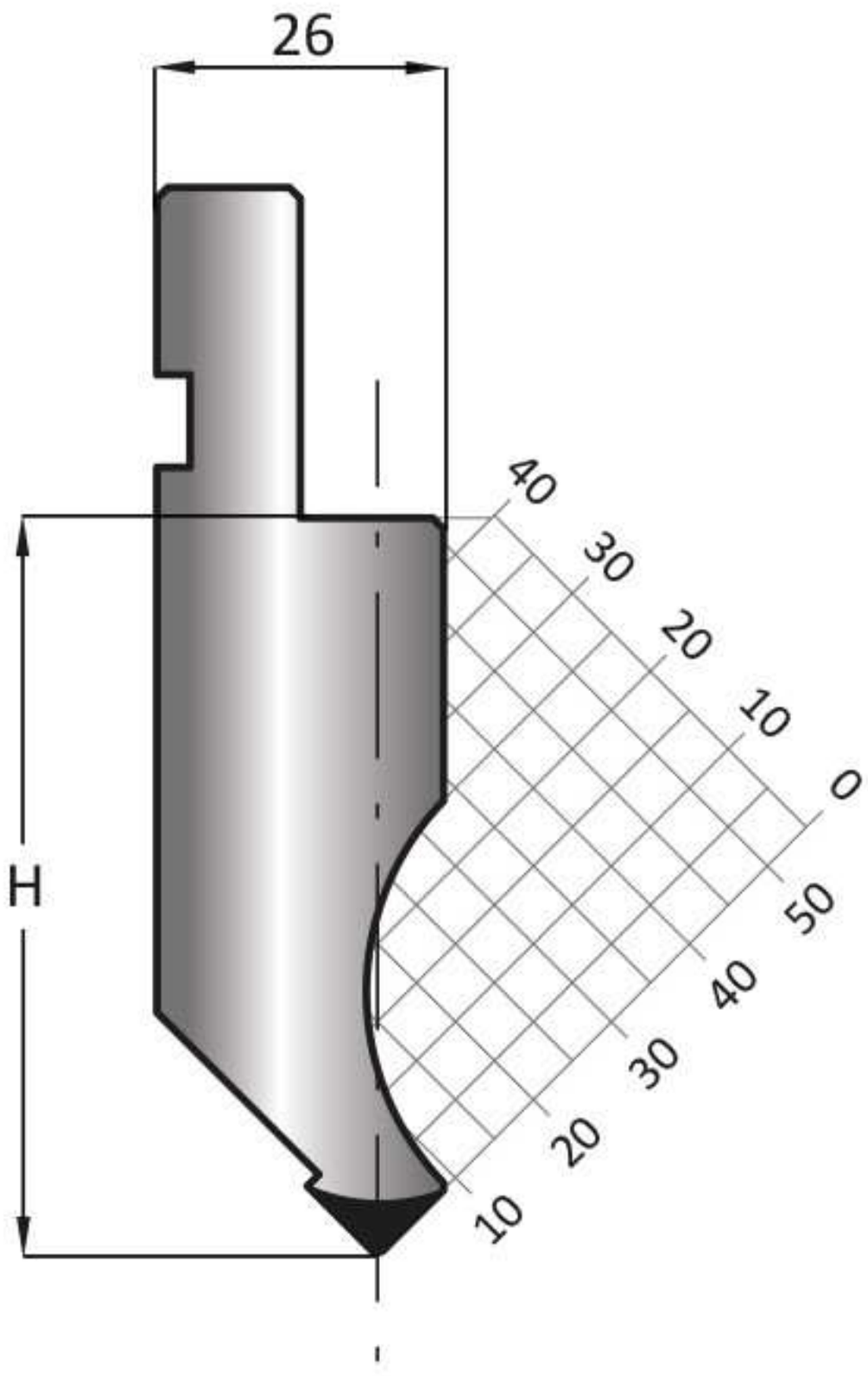

LENGTH	415	835
SECTION	805	