CODE	R	L	Mt
10.183	4.00	A	

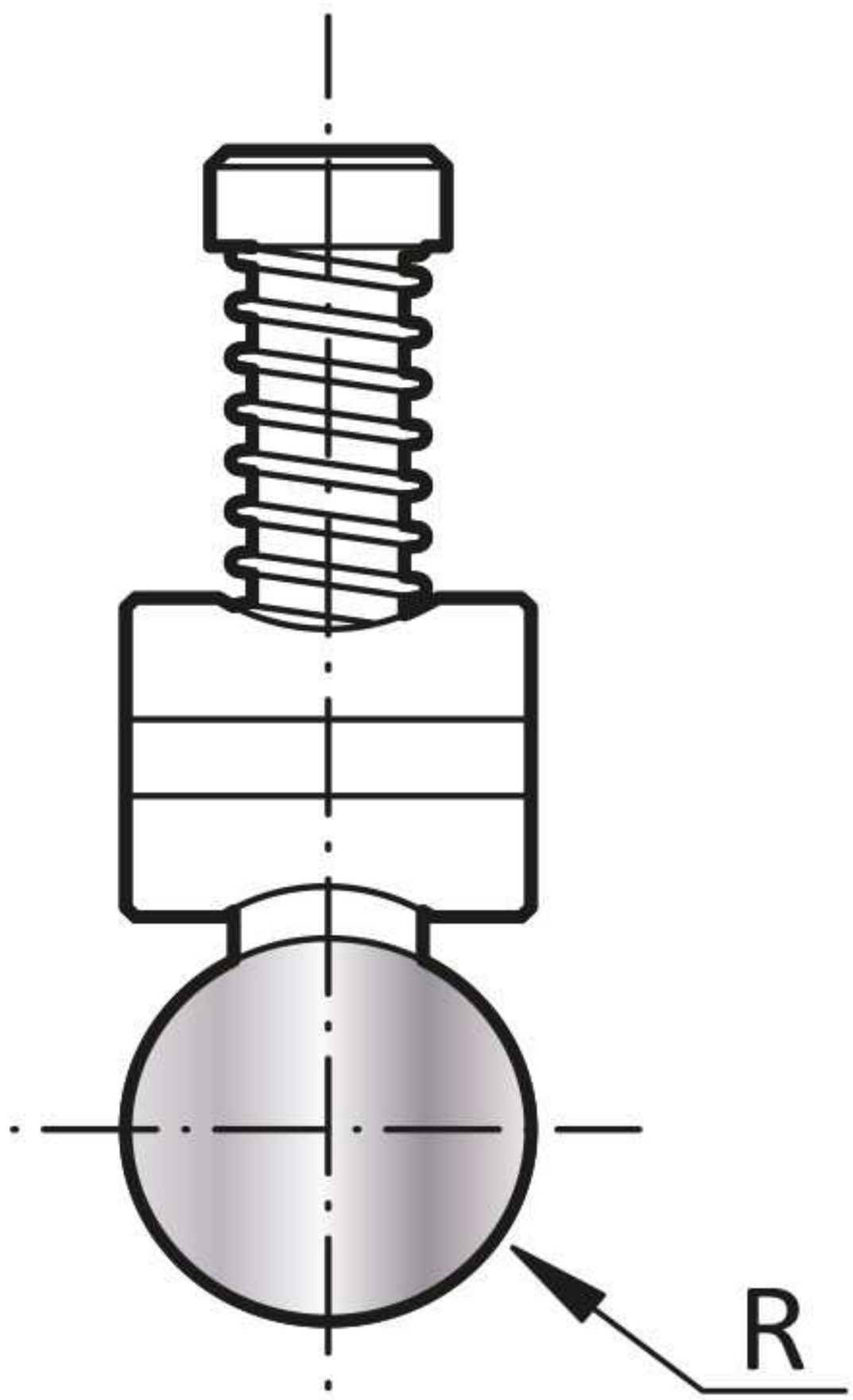

LENGTH 415 835