CODE	α	R	H	T/Mt	Mt
10.176	88°	0.60	66.74	35	

88°

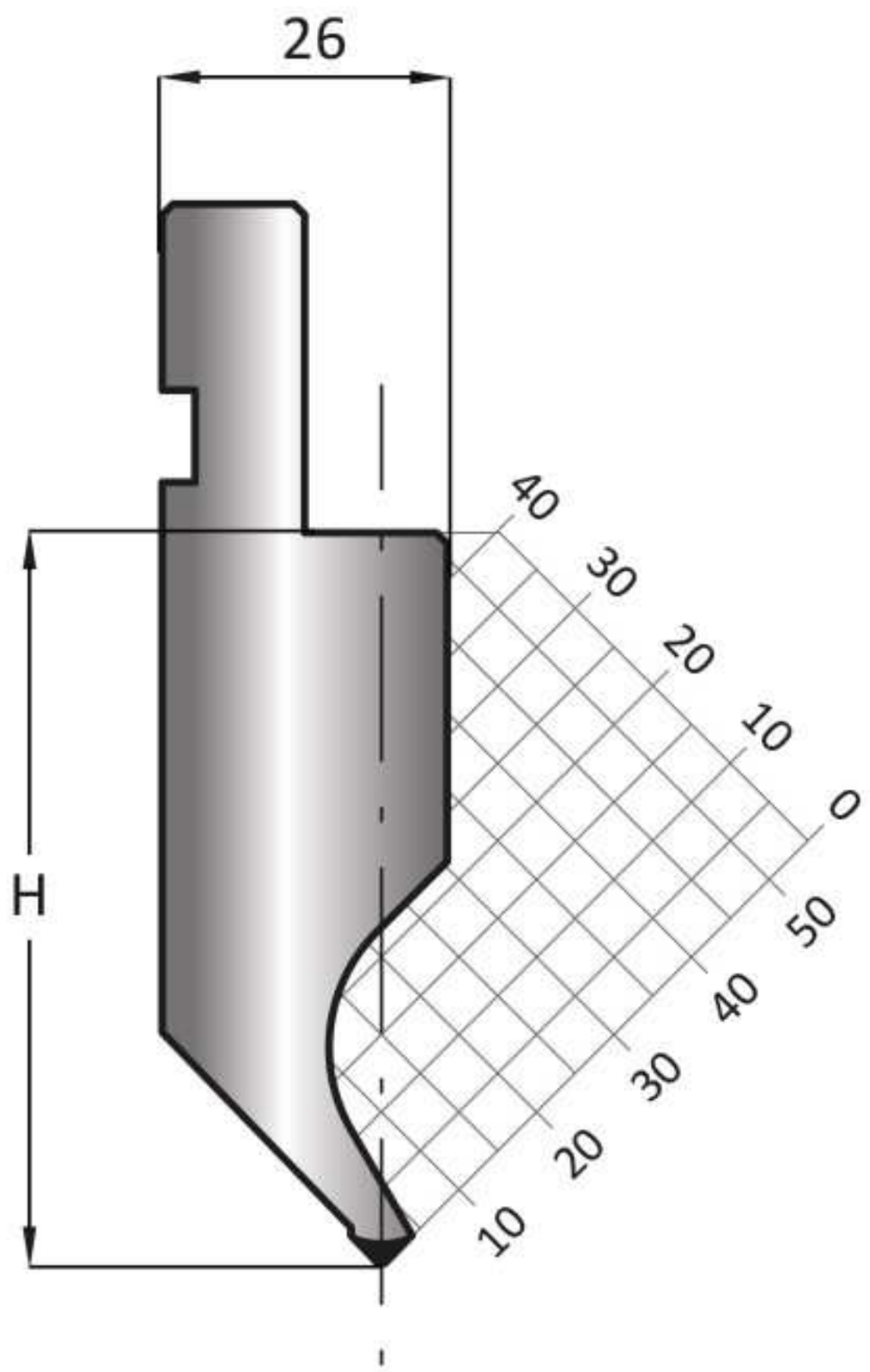

LENGTH	415	835
SECTION	805	