CODE	R	H	T/Mt	Mt
25.994	1.00	100.00	50	

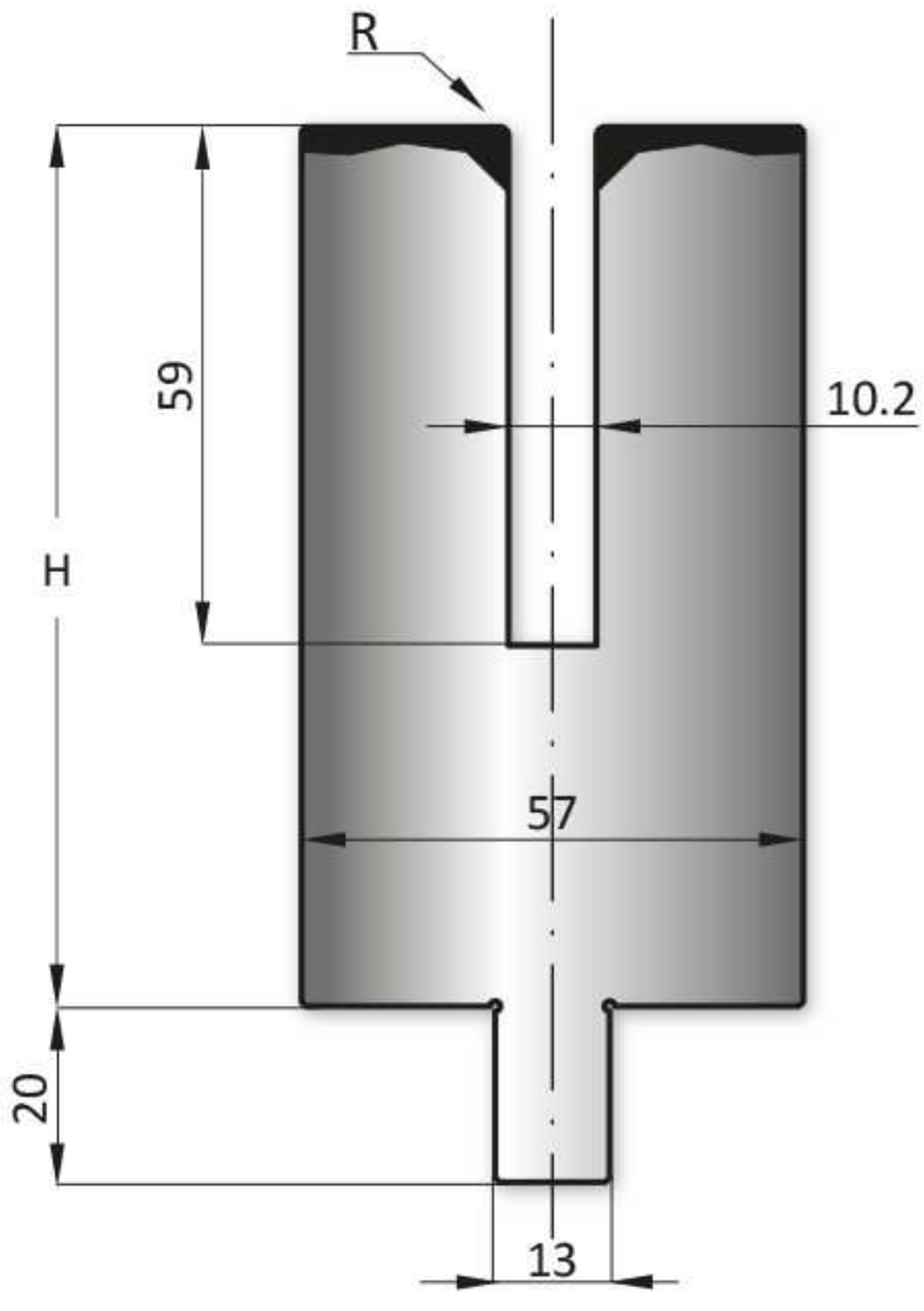

Max sp 1,5mm Max tk 1,5mm

LENGTH	100	200	300	500
SECTION	550			