CODE	α	V	R	H	T/Mt	Mt
24.101	85°	6	0.80	55	100	

85°

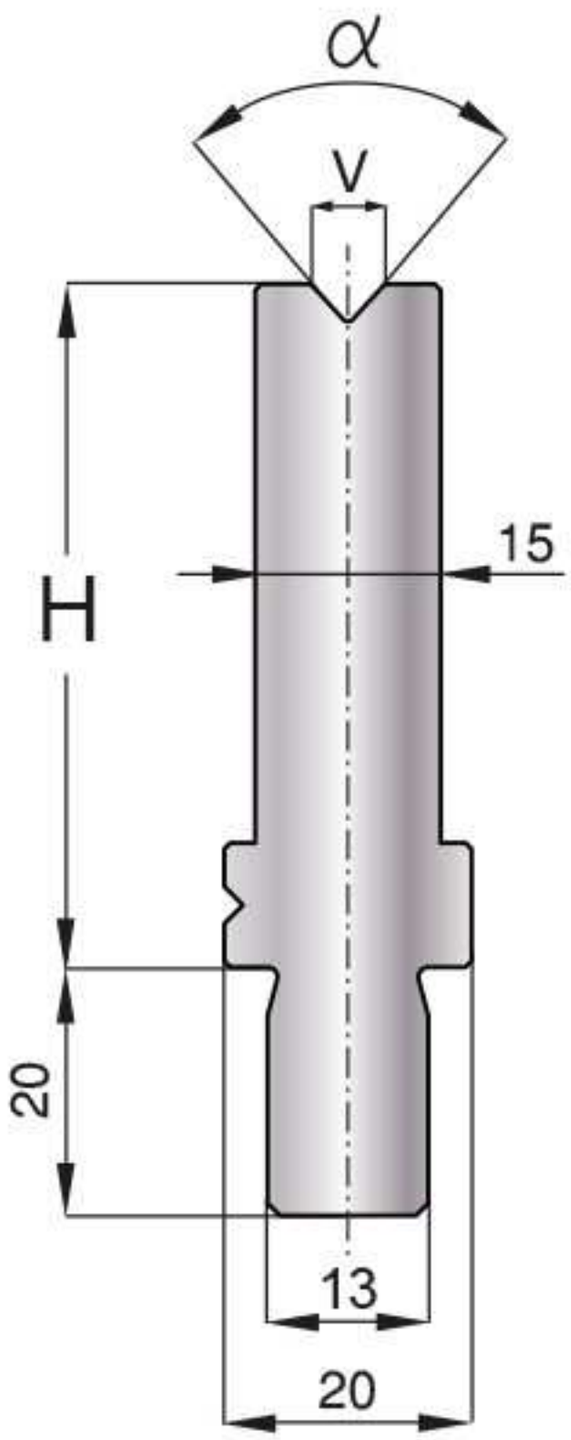

LENGTH 100 200 300 500

SECTION 550