CODE	α	V	R	H	T/mt	Mt
20.318	30°	8	0.80	80	35	

30°

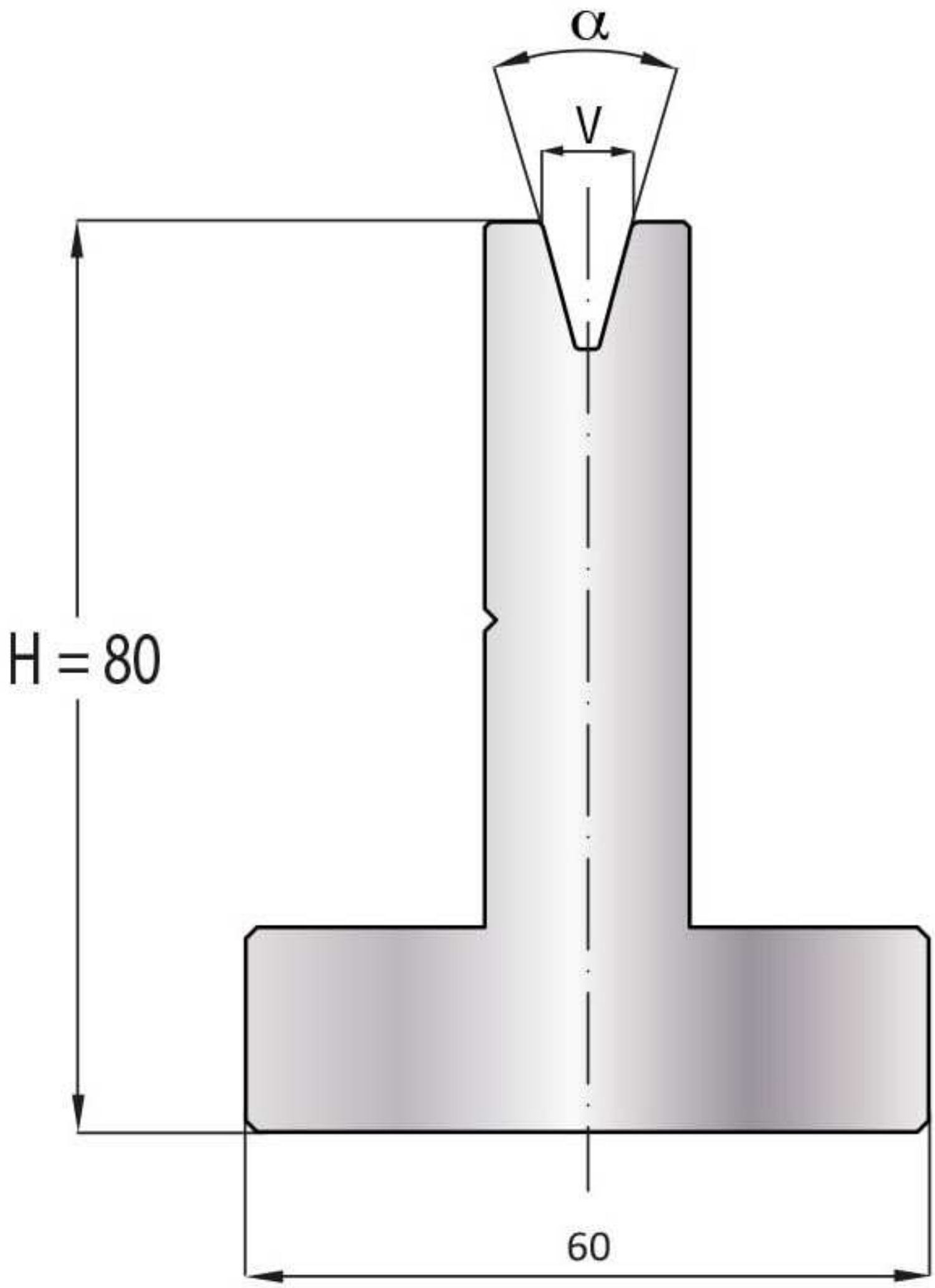

LENGTH	415	835
SECTION	805	