CODE	H	T/Mt	Mt
15.760	120.00	100	

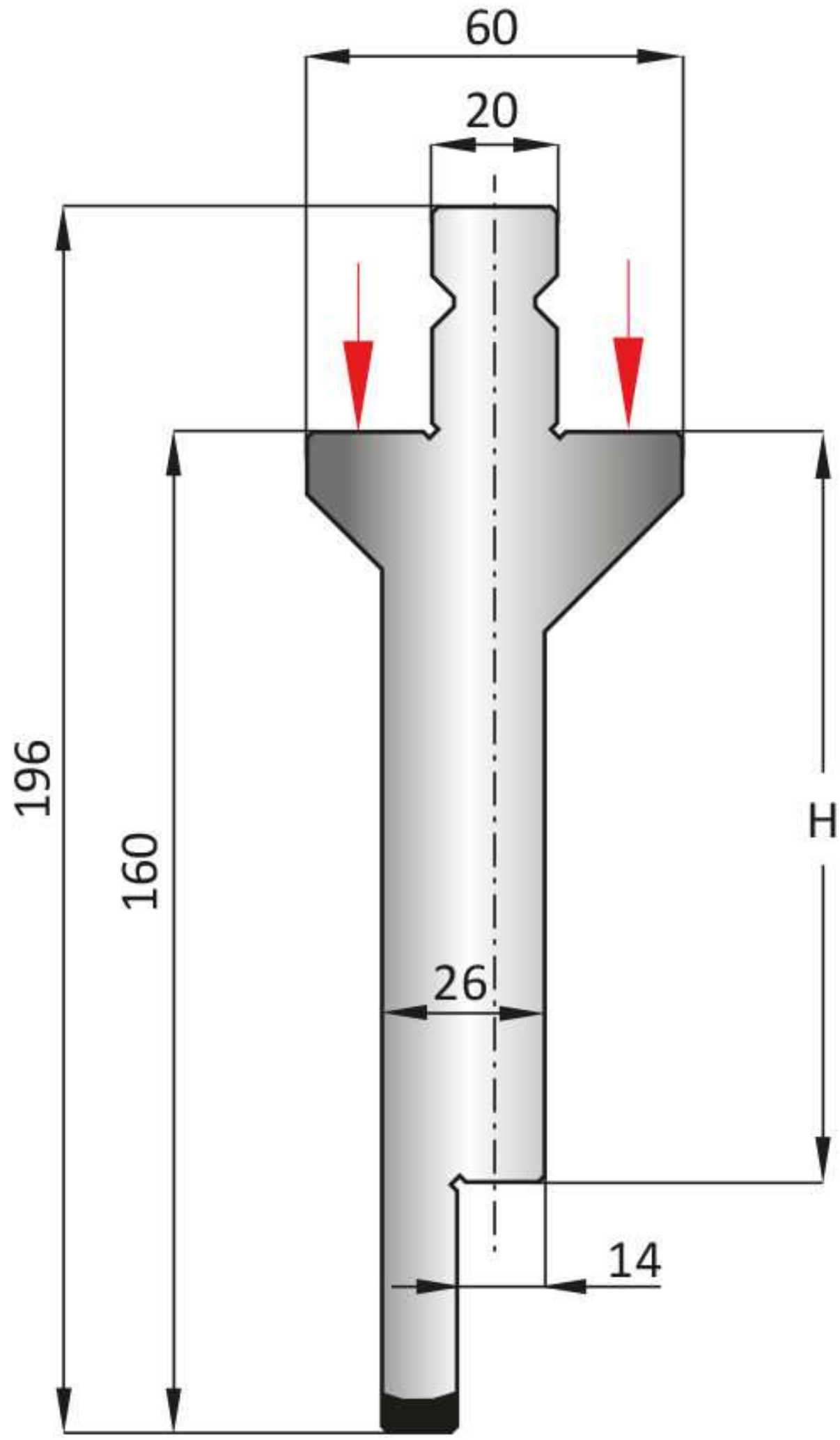

LENGTH	100	200	300	500
SECTION	550			