CODE	α	R	H	T/Mt	Mt
11.867	85°	0.25	104.50	50	

85°

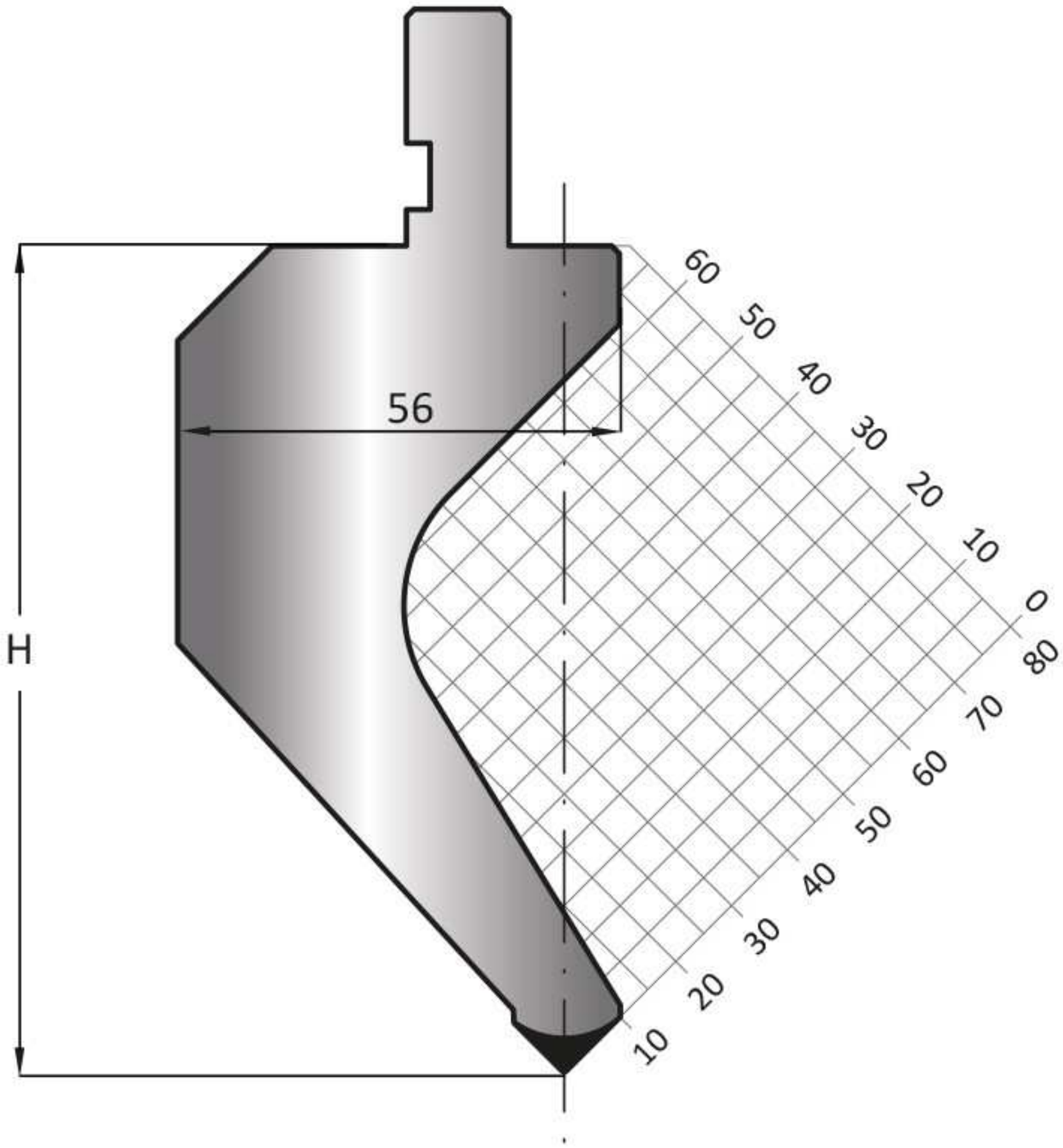

LENGTH	415	835
SECTION	805	