CODE	α	R	H	T/Mt	Mt
11.800	85°	1.00	200.00	70	

85°

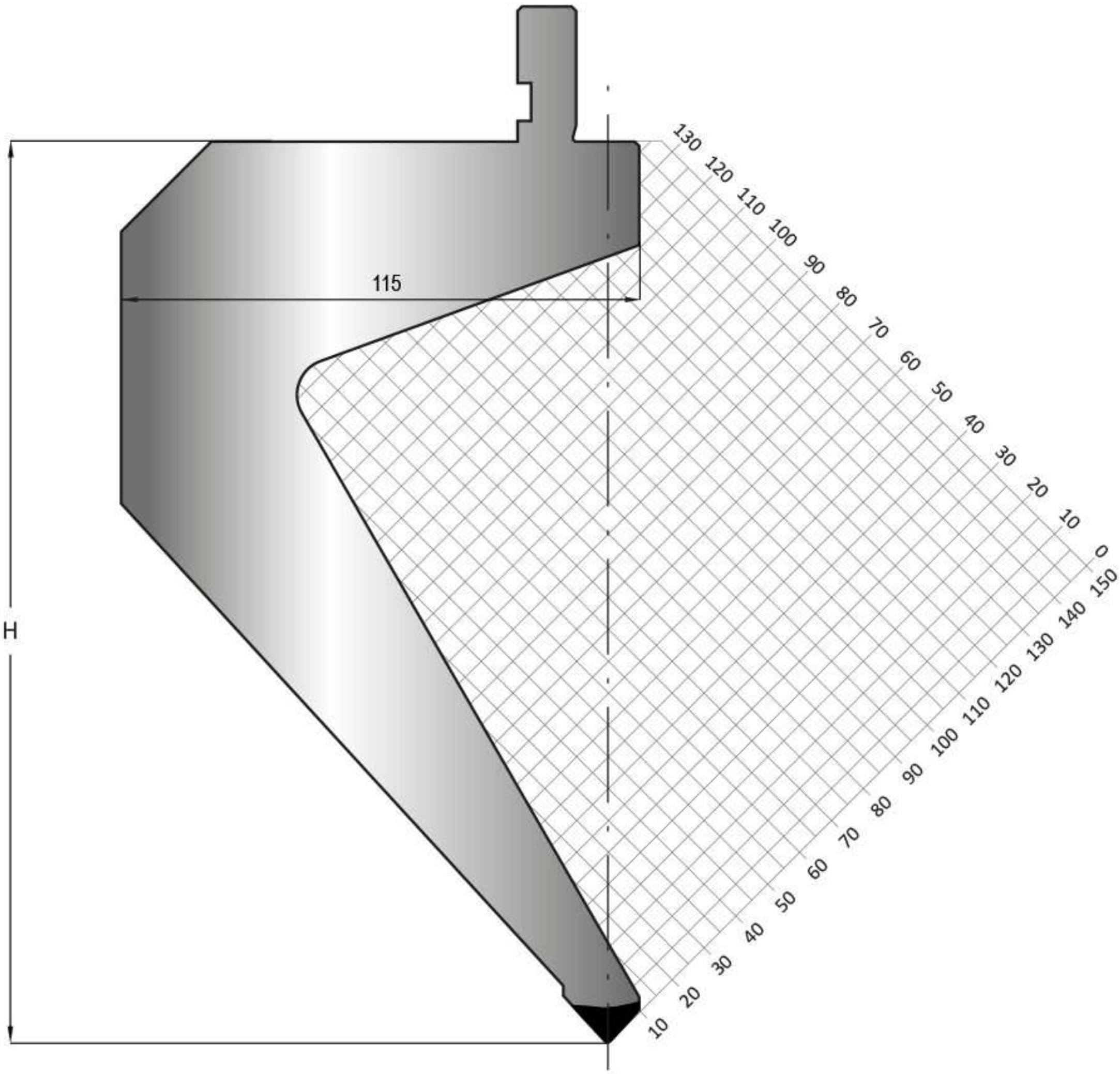

LENGTH 505

SECTION 500