CODE	α	R	H	T/Mt	Mt
11.600	35°	0.80	90.00	70	

35°

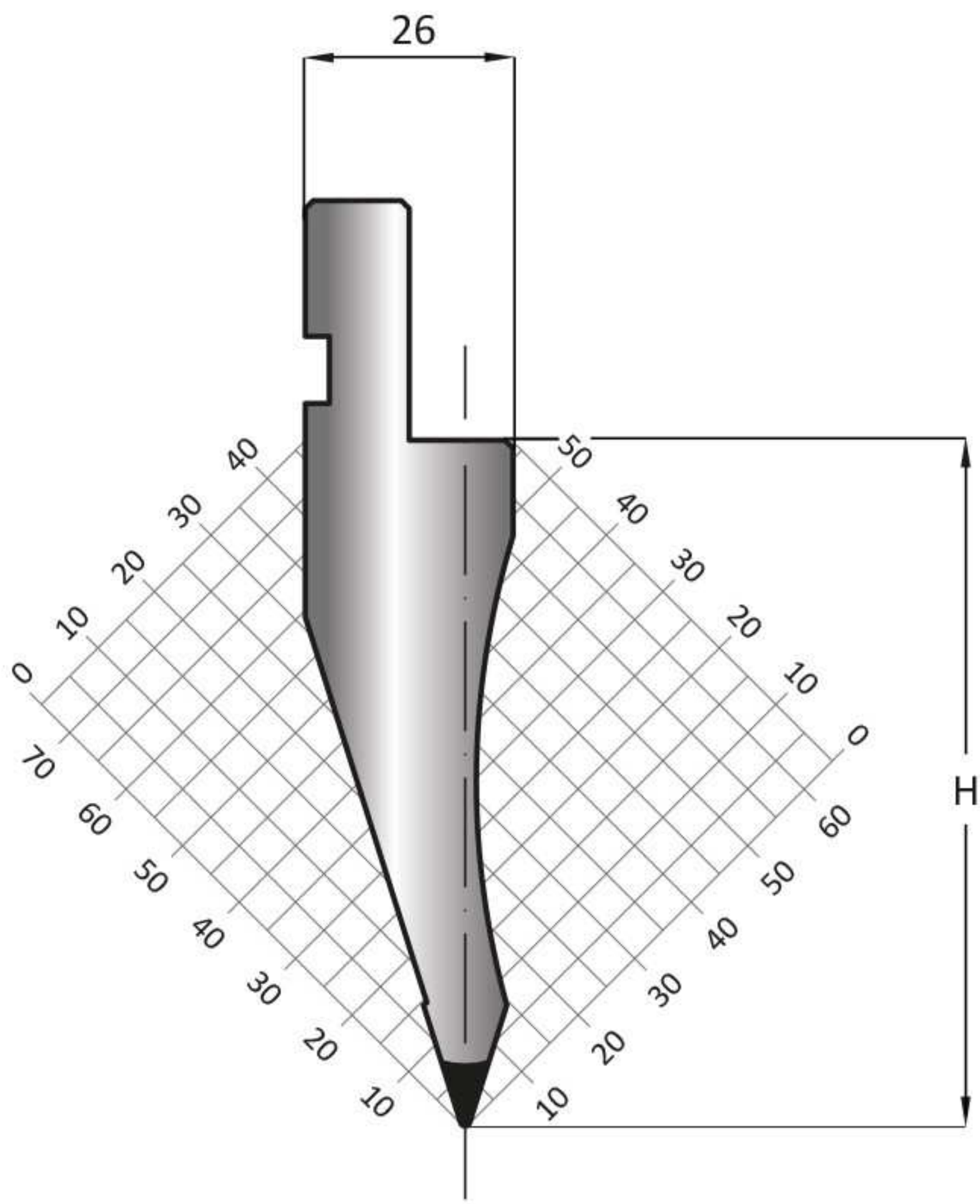

LENGTH	415	835
SECTION	805	