CODE	α	R	H	T/Mt	Mt
10.626	85°	0.25	100.00	50	

85°

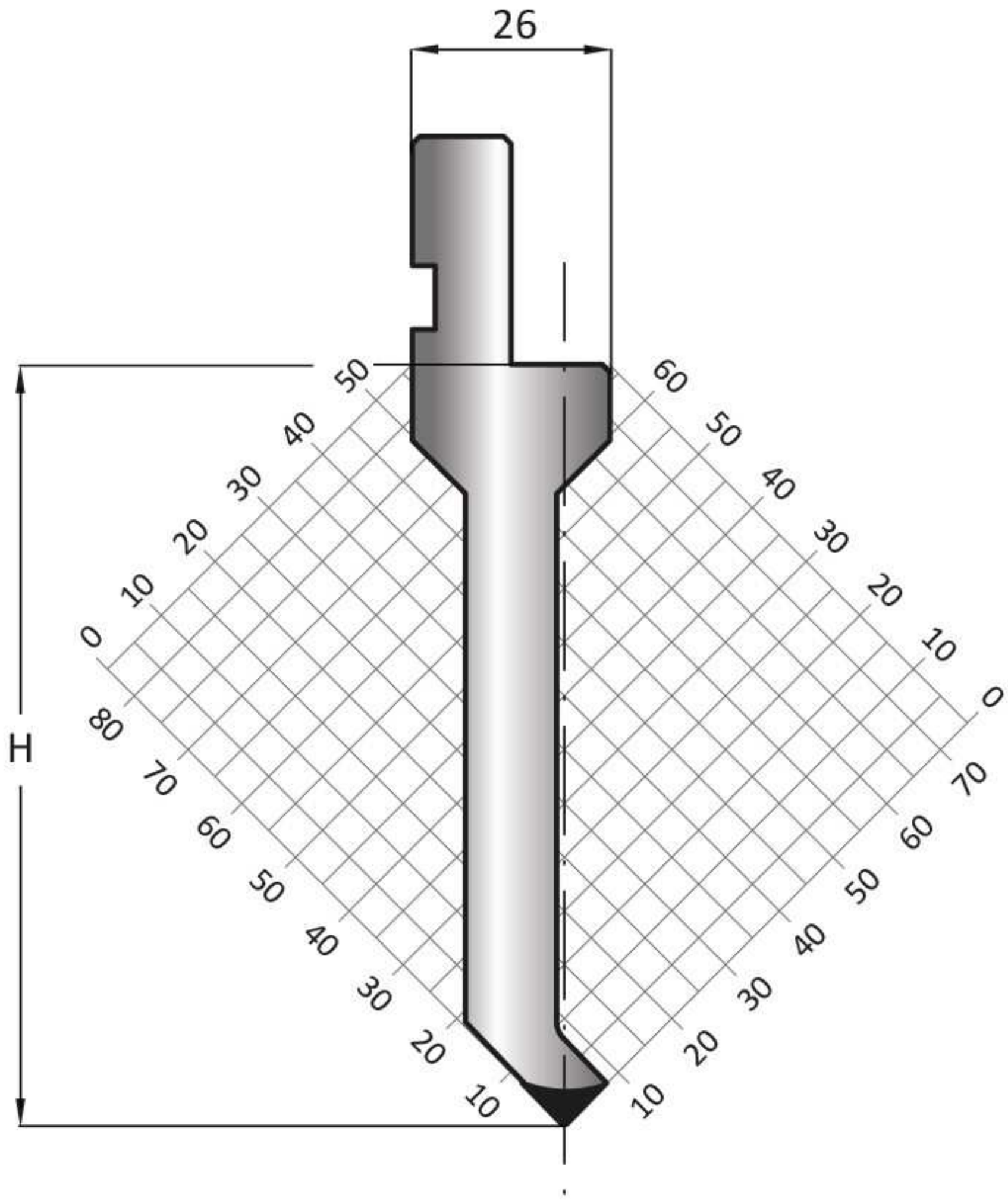

LENGTH	415	835
SECTION	805	