CODE	α	R	H	T/Mt	Mt
10.263	90°	0.25	100.00	50	

90°

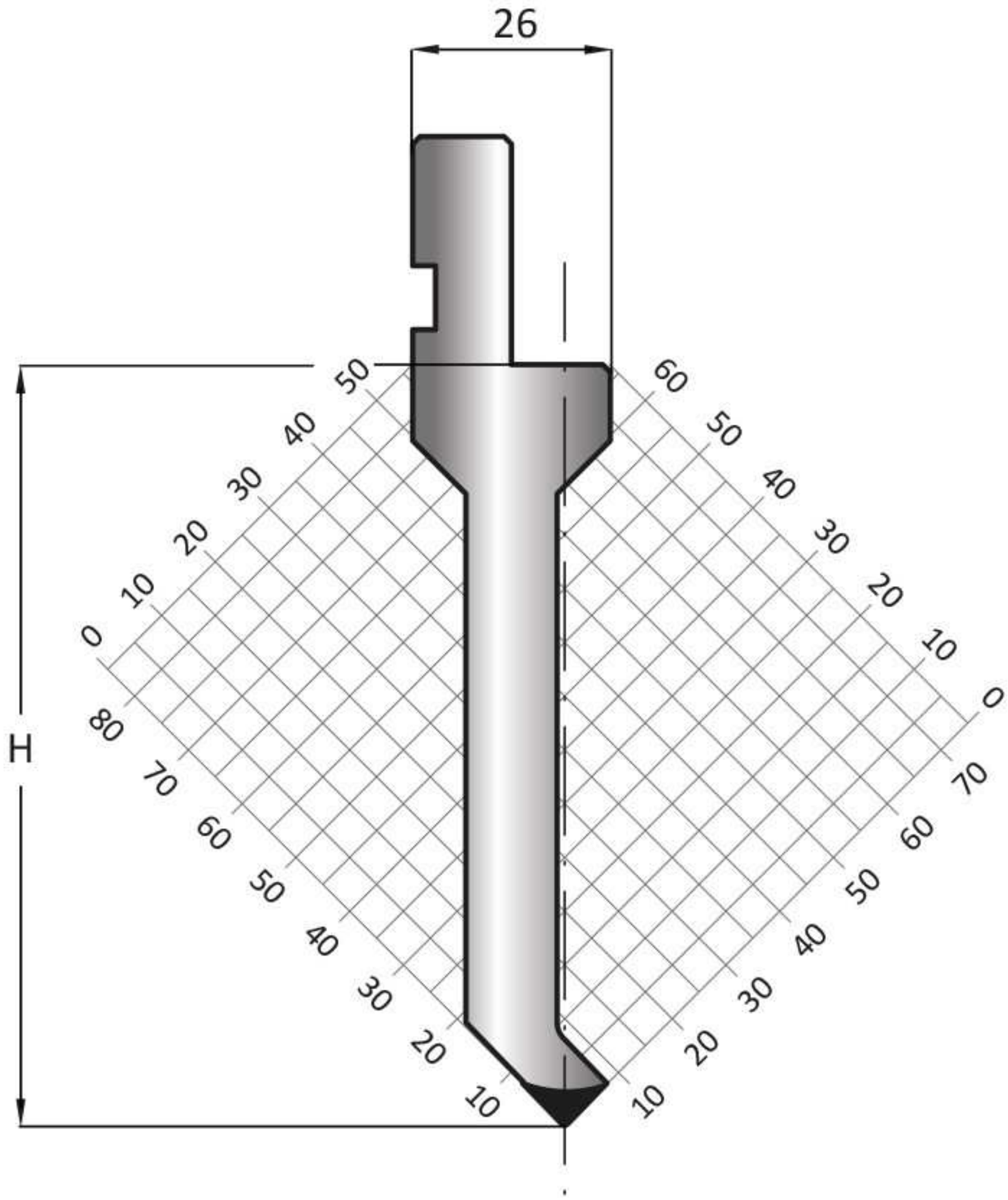

LENGTH	415	835
SECTION	805	