CODE	α	R	H	T/Mt	Mt
10.175	90°	0.60	66.75	35	

90°

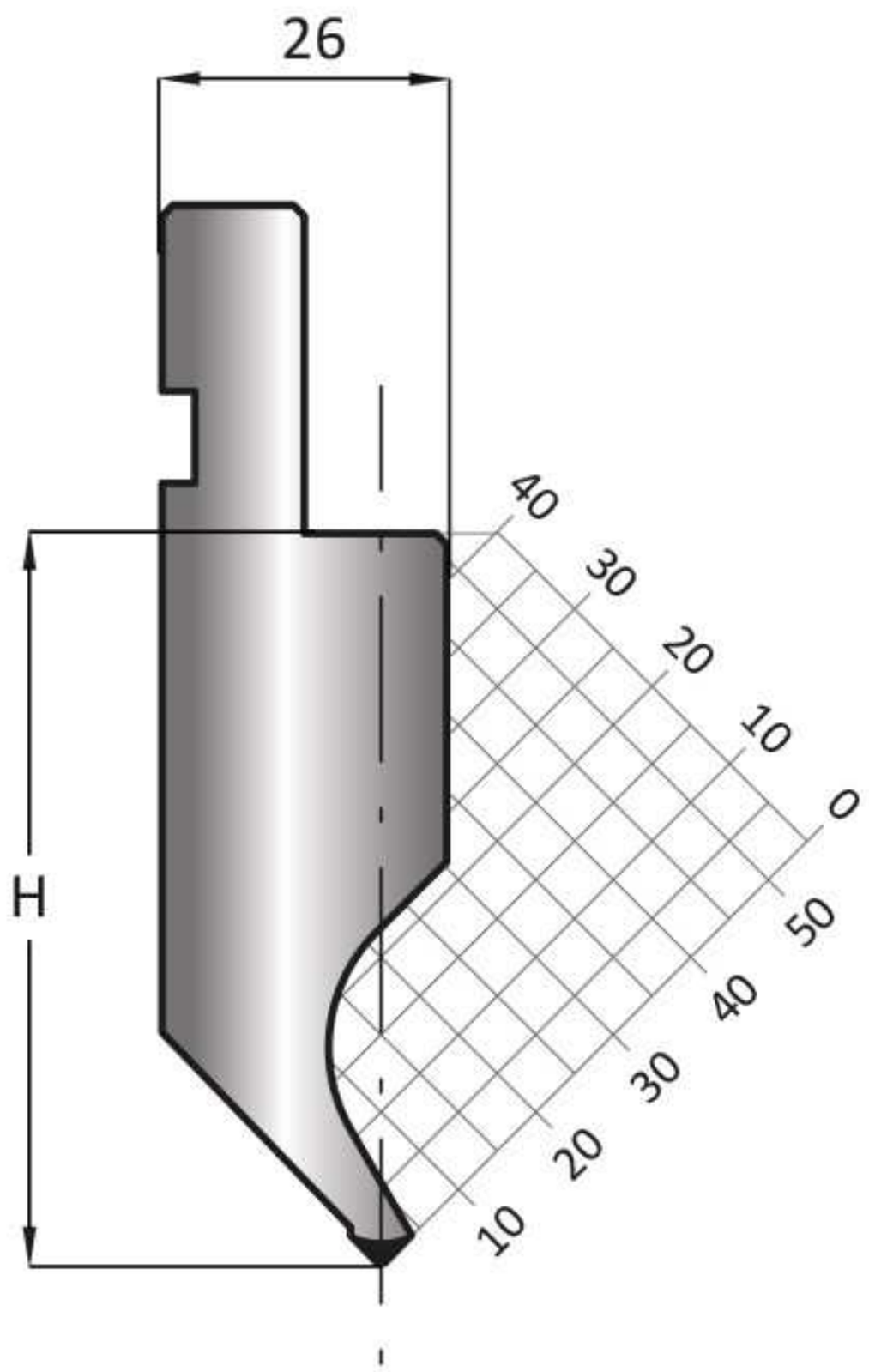

LENGTH	415	835
SECTION	805	